FEFCO CODE

© 2022, 12TH EDITION

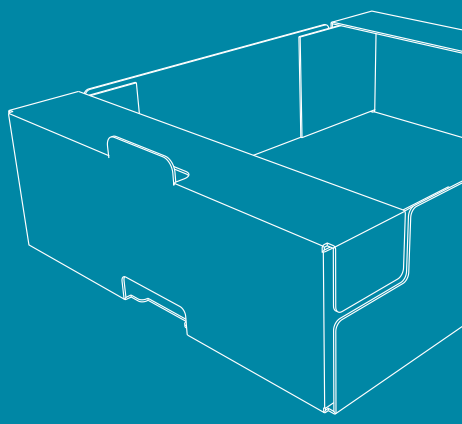

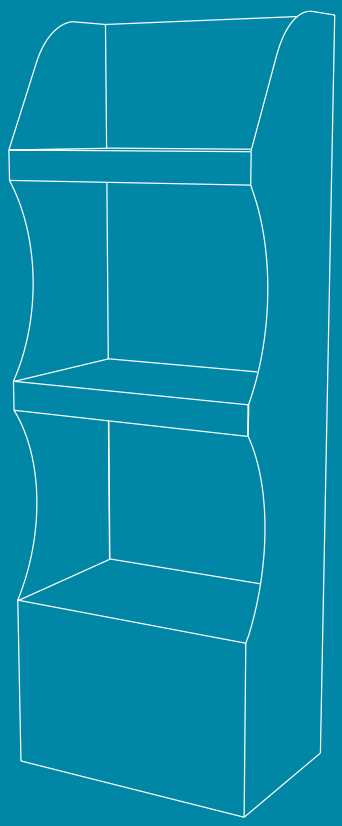

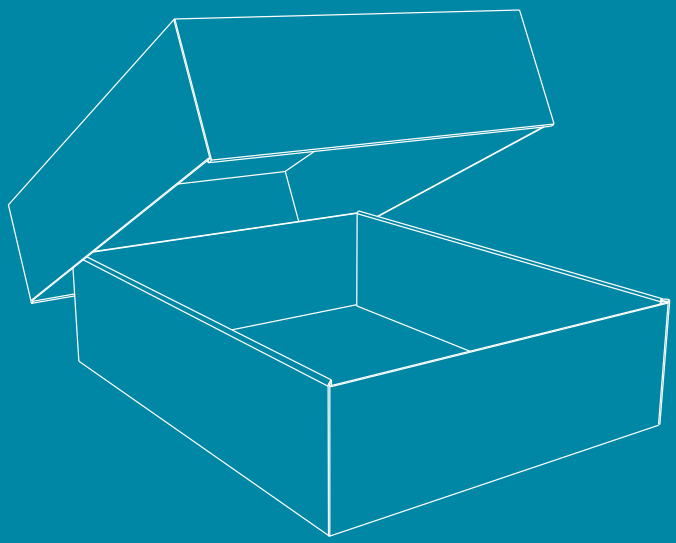

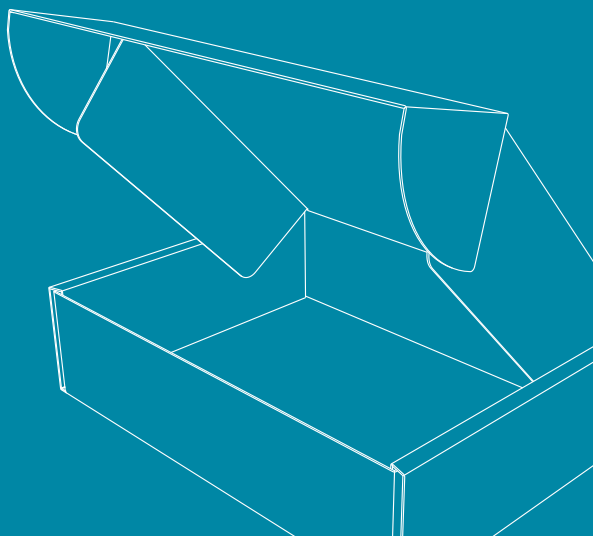

DESIGN STYLE LIBRARY
FOR CORRUGATED BOARD PRODUCTS

FEFCO
Corrugated Packaging

The FEFCO code is the internationally recognised system for the classification of corrugated board packaging designs. It contains designs of the most common box types with a code number attached to each design, simplifying the identification process.

PUBLISHED BY FEFCO
Avenue Louise 250
1050 – Brussels
Belgium
www.fefco.org

Adopted by ICCA,
the International Corrugated Case Association,
with its worldwide membership.
www.iccanet.org

CONTENT

FEFCO Code – Design style library for corrugated board products 4

List of NEW designs 8

0100 9
Commercial rolls and sheets

0200 15
Slotted boxes

0300 30
Telescopic boxes

0400 41
Folder boxes and trays

0500 74
Slide boxes

0600 80
Rigid boxes

0700 86
Ready-glued cases

0800 103
Retail and e-commerce packaging

0900 123
Interior fitments

INTERACTIVE PDF

The digital version of this document has interactive links to help locate the right design quickly. Use the table of contents to get to each code series, by clicking the miniature image (s) in the overview.

The small Fefco logo on each page will lead back to the content page. The number in the top right corner will lead back to the code overview.

FEFCO
Corrugated Packaging

© 2022, 12th Edition - All rights reserved.

FEFCO Code – Design style library for corrugated board products

The first Code was developed in the 1960's by FEFCO and ESBO (formerly ASSCO) as a numerical code system for corrugated boxes to avoid confusion when communicating in different languages. This is the 12th edition of the Code, extended with new developments.

As corrugated boxes continuously develop it is impossible to describe all of them in this catalogue. Other styles, together with custom designs to meet specific requirements, are always possible.

References to this Code may be used in orders, specifications or publications. Any additions or modifications are allowed only though FEFCO.

SYMBOLS USED IN DRAWINGS AND COMPUTER SYSTEMS

DRAWING SYMBOL CUTS, SCORES, SLITS ETC.	DESCRIPTION
	contours of erected cases or cutting lines of case blanks
	crease lines
	partial cut lines
	perforation lines
	tape lines
	tearaway lines

CASE DIMENSIONS

All dimensions are expressed as internal dimensions in mm as follows:

Length (L) x Width (W) x Height (H)

Length (L): Longer dimension at the opening
Width (W): Shorter dimension at the opening
Height (H): Dimension from the top of the opening to the base
Variable (v): A variable dimension defined by the design attributes

The dimensions L, W, H and v are specified in each description of the case construction, for some designs the numerical value of W can exceed the numerical value of L. Dimensions should be measured under standard climatic conditions (23°C and 50 % RH according to the standard EN 20187), on the flat blank from the centre of crease bearing the thickness of the material in mind.

For cases with overlapping outer flaps the length of the area of overlapping (o) should be given as a fourth measurement after an oblique stroke, i.e.

355 x 205 x 120/40 mm
(L) (W) (H) (o)

SHEET DIMENSIONS

Unless otherwise specified, the dimensions of a corrugated sheet are expressed in mm as follows:

1st dimension x 2nd dimension
1st dimension - along the flute glue lines
2nd dimension - across the flute glue lines

STYLE VERSIONS

Several case types may have derived versions without the necessity to create a new style. In this case a suffix should be added to the basic style number, separated by a dot.

Example: **0201.2**
A version may be unique to individual manufacturers.

© 2022, 12th Edition - All rights reserved.

STYLES AND THE MANUFACTURERS JOINT

The drawing style layouts as shown in this Code may need to be rearranged depending on the manufacturer's chosen joint. Some styles may have a manufacturer's joint which may be glued, stitched or taped. A glued or stitched joint may have an extension to either the short or the long panel. The standard suffix can be added to the code name to determine "G" for glued and "S" for stitched box, e.g. 0201-G.

Panel configurations may be visualized in alternate ways to suit manufacturing capability. Jointing seams may be positioned on the left or right hand side of any style, which may be a long or short panel. Any jointing panel may be extended above and/or below the standard depth configuration of a jointed style.

Example: **0201**

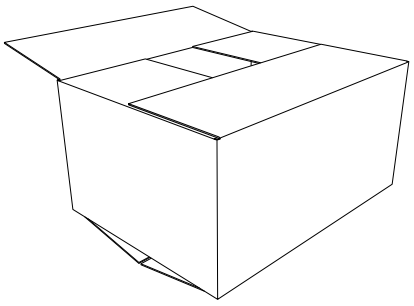

Taped joint

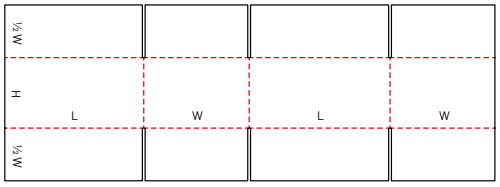

Glued or stitched joint

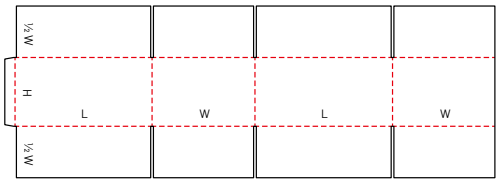

This applies to all designs in this Code.

COMBINATIONS OF STYLES

The construction styles shown are of the basic types of corrugated cases. If the ultimate construction is a combination of two or three basic models, e.g. flap arrangements, they may also be described as follows:

Top flaps as 0204, Bottom flaps as 0215

0204

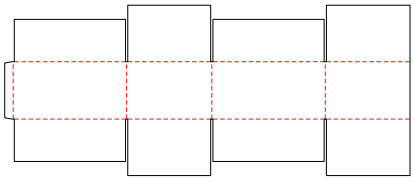

0215

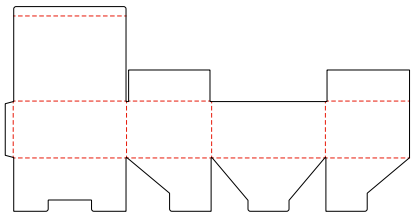

0204/0215

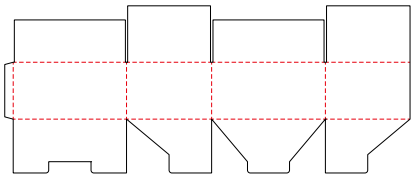

This type may also be described as 0204/0215 (Top flaps/Bottom flaps).

MANUAL OR AUTOMATED ERECTION

Each design style includes one of the following indications:

M: usually manual erection
A: usually automated erection
M/A: can be either manual or automated erection

These indications are based on current practice and are intended to give additional information for specifications and users. Some manually erected cases can be closed automatically (e.g: 0216 or 0712).

© 2022, 12th Edition - All rights reserved.

Description of the basic style series

THE TERMS BOX, CONTAINER AND CASE ARE INTERCHANGEABLE

GENERAL REMARK

Please note, that several case designs contained in the Code under a specific number could also be classified under other basic style series.

01 - Commercial rolls and sheets

02 - Slotted boxes
Slotted boxes consist of basically one piece with a glued, stitched or taped manufacturers joint and top and bottom flaps. They are shipped flat, ready to use and require closing using the flaps provided.

03 - Telescopic boxes
Telescopic boxes usually consist of more than one piece (e.g. top and bottom) and they fit over each other.

04 - Folder boxes and trays
Folder boxes and trays are usually made from one piece of board. The bottom of the box is hinged to form two or all side walls and the cover. Locking tabs, handles, display panels, etc. can be incorporated in some designs.

05 - Slide boxes
Slide boxes consist of several pieces of liners and sleeves sliding in different directions into each other. This group also includes outside sleeves for other cases.

06 - Rigid boxes
Rigid boxes consist of two separate end pieces and a body that require stitching or a similar operation before they can be used.

07 - Ready-glued cases
Ready-glued cases consist of basically one piece, are shipped flat and ready to use by simple assembly.

08 - Retail and e-commerce packaging
Retail and e-commerce packaging category shows the typical styles used for Point of Sale (POS) displays and trays as well as styles for the online trade.

09 - Interior fitments
Interior fitments such as inside liners, pads, partitions, dividers, etc. whether integrated in the box design or as separate items. Any shown number of panels is arbitrary and may be increased or decreased as required.

WRITING OF THE STYLE CODE

FULL CODE: XXXX.XXXX

STYLE XXXX	STYLE VERSION .XXXX
The standard recognised shape/design from this code.	The version number to differentiate the variation from the standard design (corresponding to an individual drawing or CAD/CAM library).

© 2022, 12th Edition - All rights reserved.

Closure of boxes

Correct and effective closure of the packaging is as important as the packaging construction itself.

The following methods of closures are possible either singly or in combination:

- by gluing, cold or hot
- by taping
- by interlocking
- by stitching

CLOSING BY TAPING

This can be done according to the examples shown.

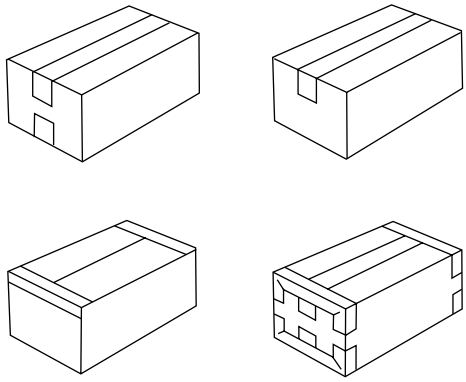

CLOSING BY STITCHING

This can be done according to the examples shown.

Coding of interior fitments

The following range of interior fitments can be coded depending on the number of panels used, in any combination of shapes (for computer systems).

NUMBER OF PANELS		CODE
2	>	0982
3	>	0983
4	>	0984
5	>	0985
6	>	0986
7	>	0987
8	>	0988
9	>	0989
10	>	0990
11	>	0991
12	>	0992
13	>	0993
14	>	0994
15	>	0995
16	>	0996
17	>	0997
18	>	0998
19	>	0999

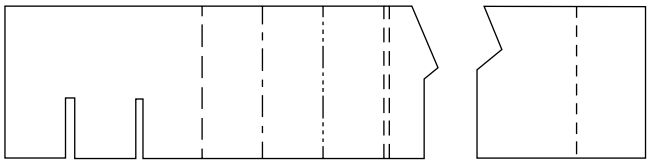

0982/0999
M

© 2022, 12th Edition - All rights reserved.

List of NEW designs

100	200	300	400	700	800		900
0111	0219	0319	0407	0702	0801	0853	0912
0112	0220	0360	0414	0704	0802	0854	0936
0113	0221		0418	0705	0803	0858	0937
0119	0222		0425.1	0706	0804	0859	0938
0121	0229.1		0427.1	0707	0808	0860	0939
0122	0232		0435.1	0708	0809	0861	0952
0123	0233		0436.1	0709	0815	0865	0953
0129	0233.1		0436.2	0710	0816	0866	0954
0130	0240		0438	0719	0817	0870	0955
	0241		0439	0720	0818	0871	0960
	0242		0449.1	0721	0819	0872	
			0451.1	0722	0825	0873	
			0459.1	0723	0826	0874	
			0461	0724	0830	0880	
			0462	0725	0831	0881	
			0463	0726	0832	0882	
			0464	0727	0833	0885	
			0465	0728	0834	0886	
			0466	0730	0840	0887	
			0469	0740	0841		
			0474		0842		
			0475		0843		
			0476		0845		
			0481		0846		
			0482		0847		
			0483		0848		
			0484		0849		
			0485		0850		
					0851		
					0852		

© 2022, 12th Edition - All rights reserved.

0100

COMMERCIAL ROLLS AND SHEETS

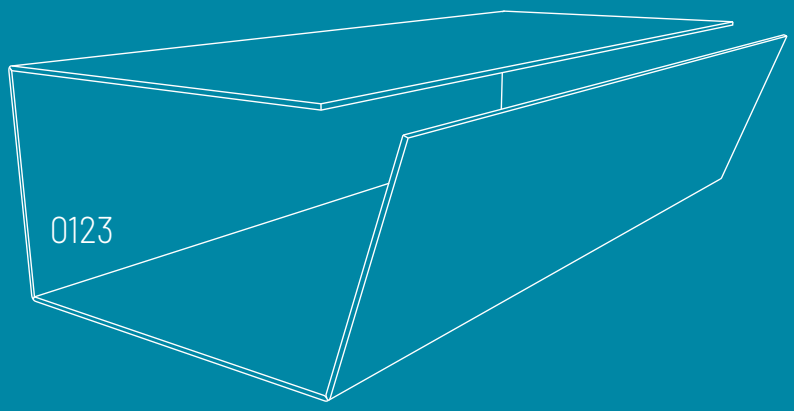

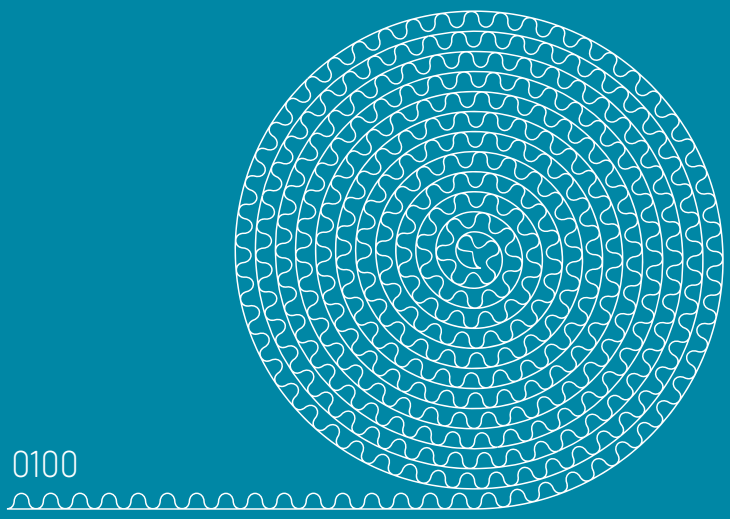

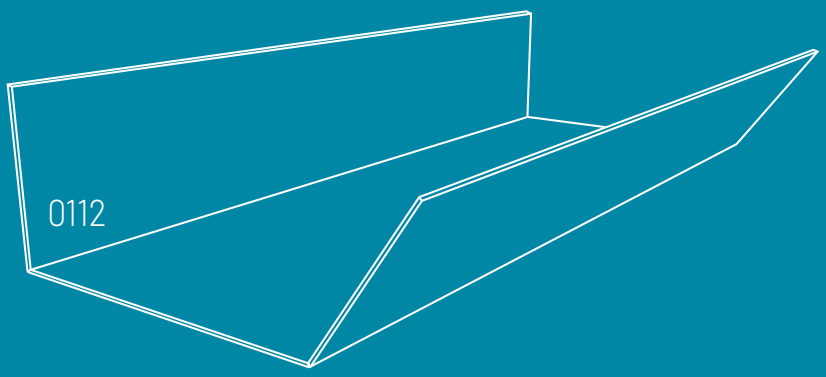

FEFCO

0100

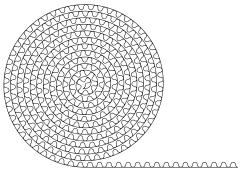

0110

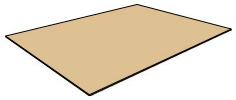

0111
NEW

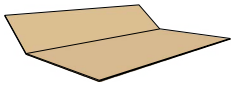

0112
NEW

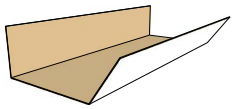

0113
NEW

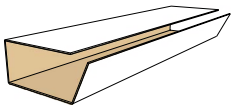

0119
NEW

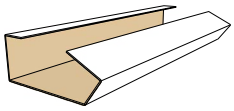

0121
NEW

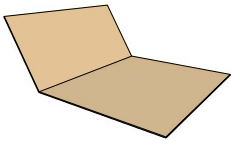

0122
NEW

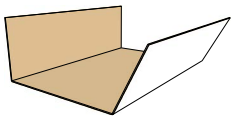

0123
NEW

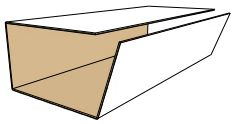

0129
NEW

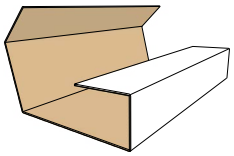

0130
NEW

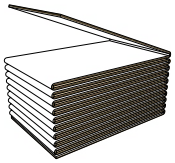

© 2022, 12th Edition - All rights reserved.

0100

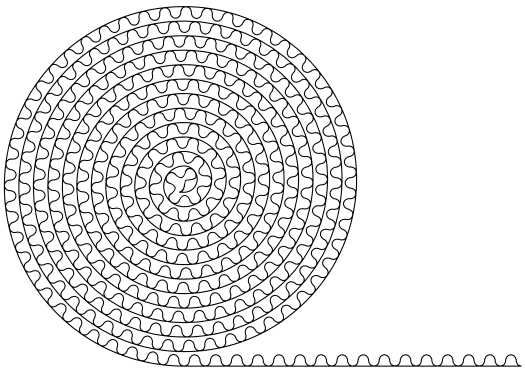

0110

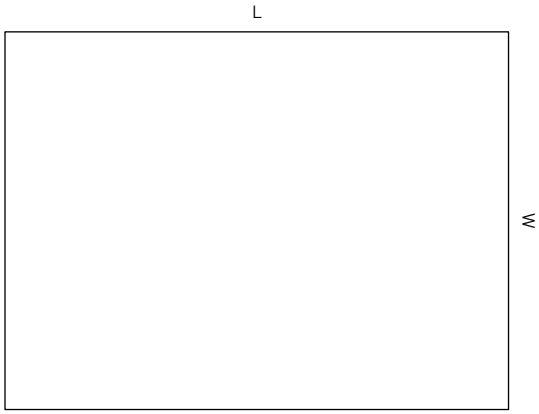

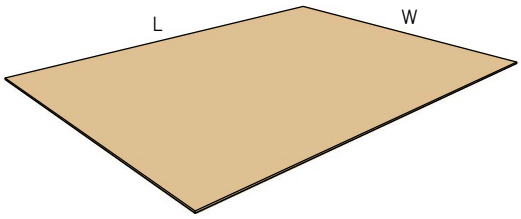

0111

NEW

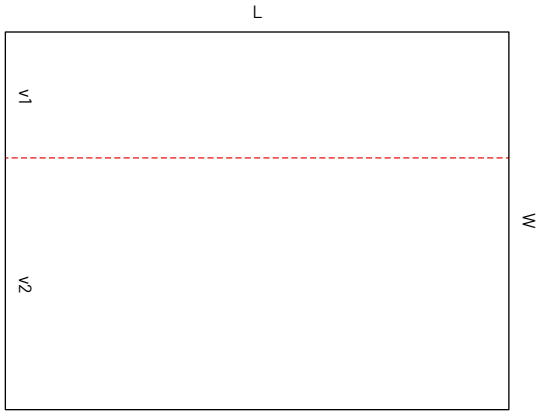

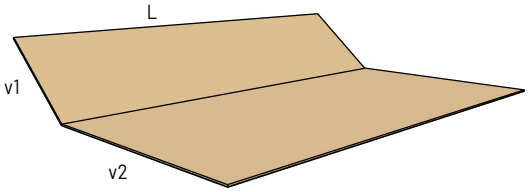

© 2022, 12th Edition - All rights reserved.

0112

NEW

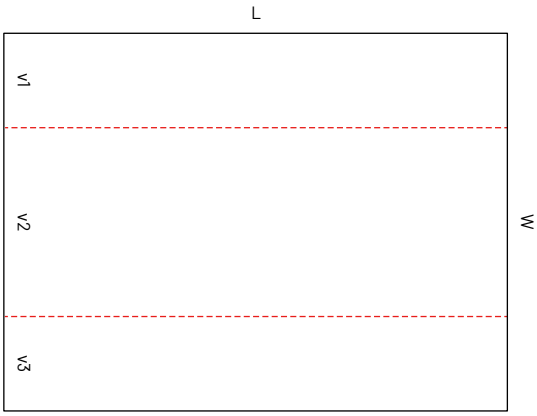

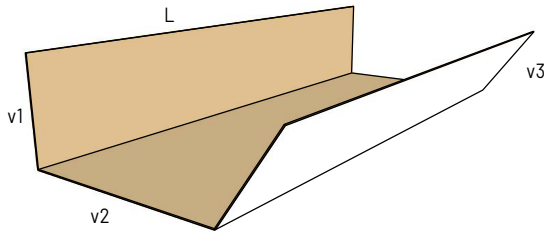

0113

NEW

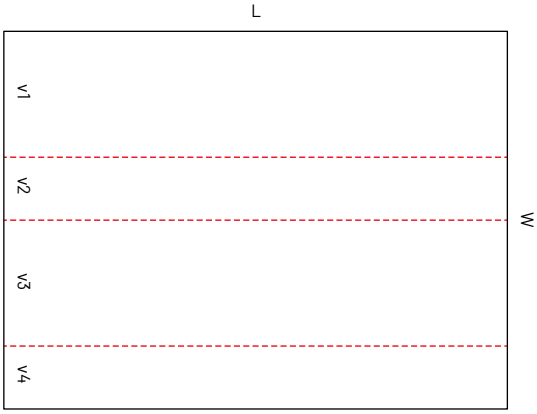

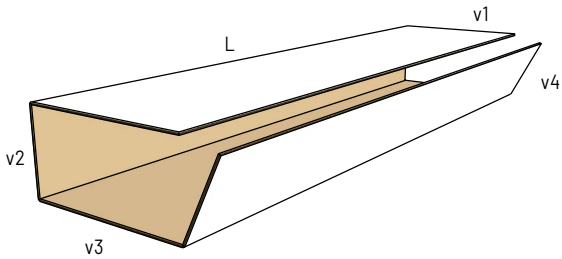

0119

NEW

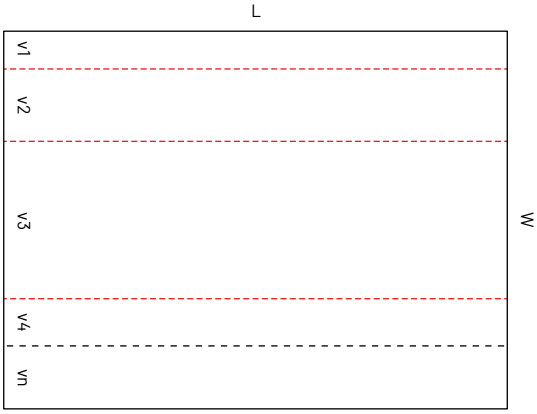

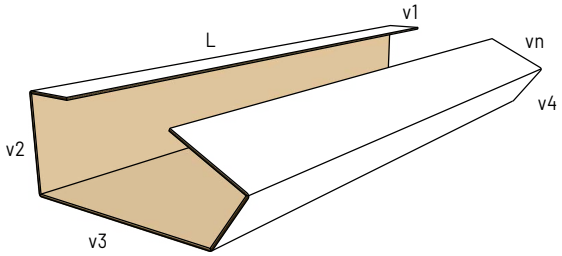

© 2022, 12th Edition - All rights reserved.

0121

NEW

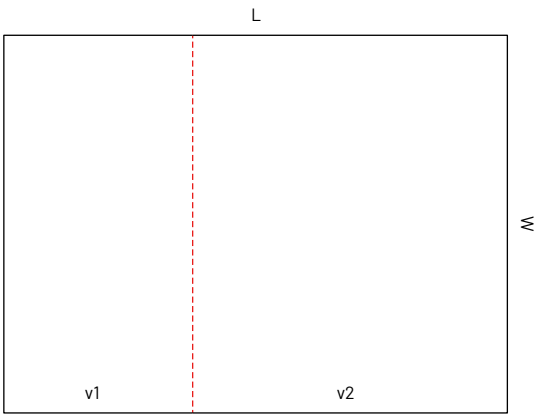

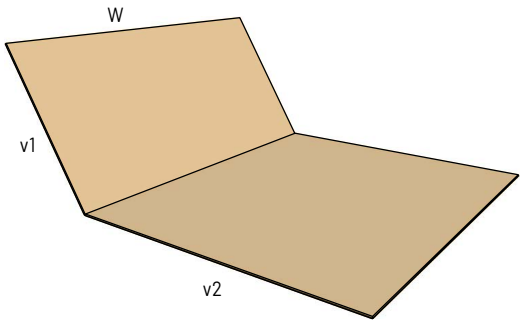

0122

NEW

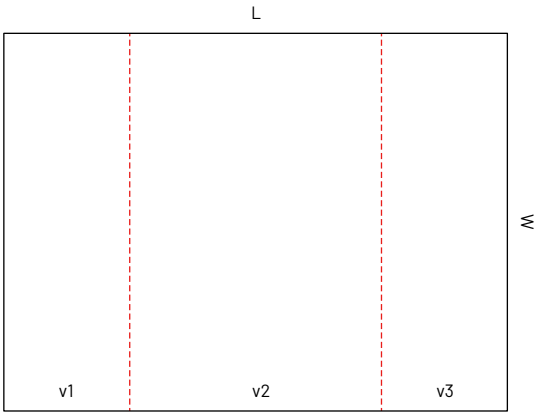

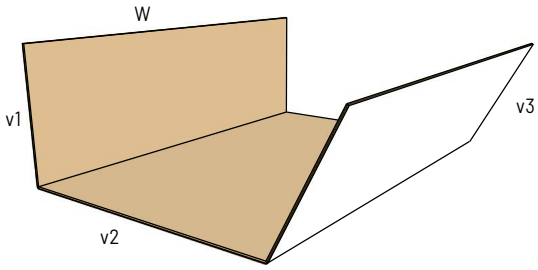

0123

NEW

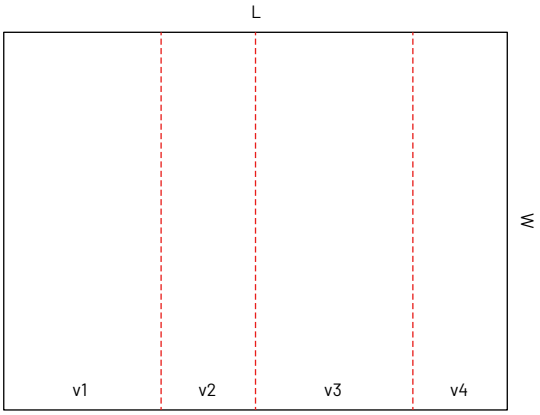

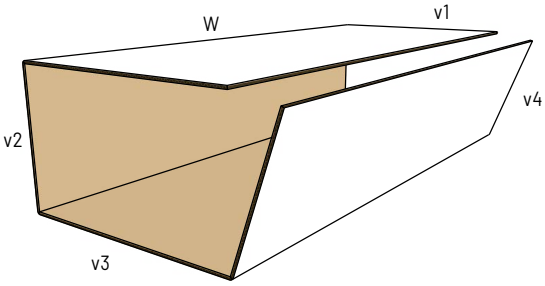

© 2022, 12th Edition - All rights reserved.

0129

NEW

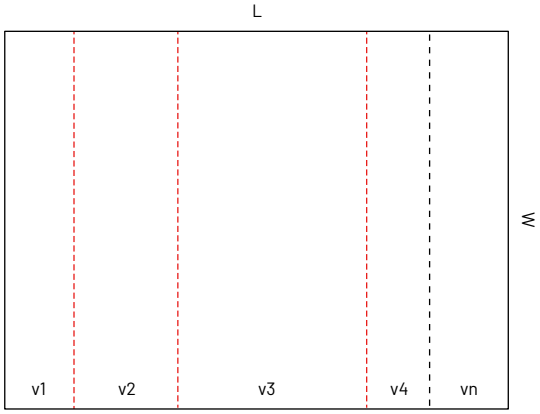

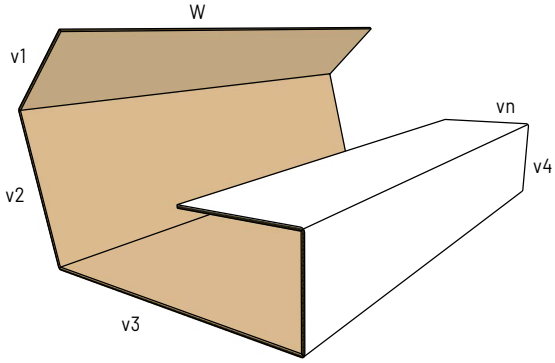

0130

NEW

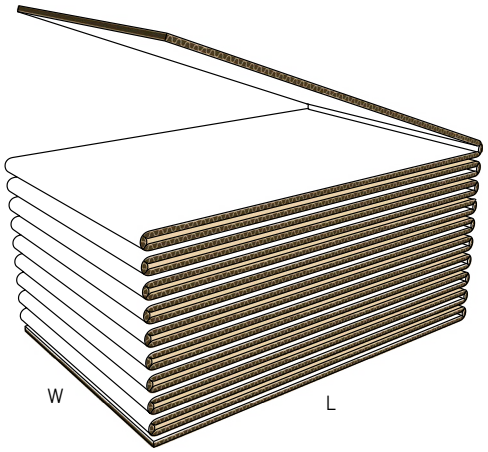

© 2022, 12th Edition - All rights reserved.

SLOTTED BOXES

Slotted boxes consist of basically one piece with a glued, stitched or taped manufacturers joint and top and bottom flaps.
They are shipped flat, ready to use and require closing using the flaps provided.

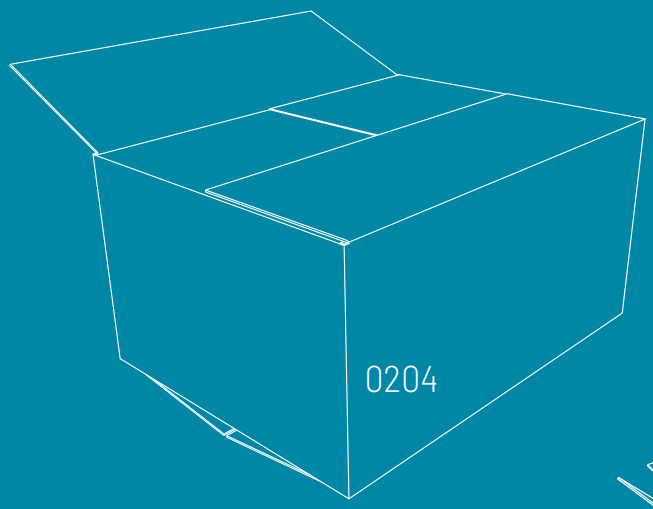

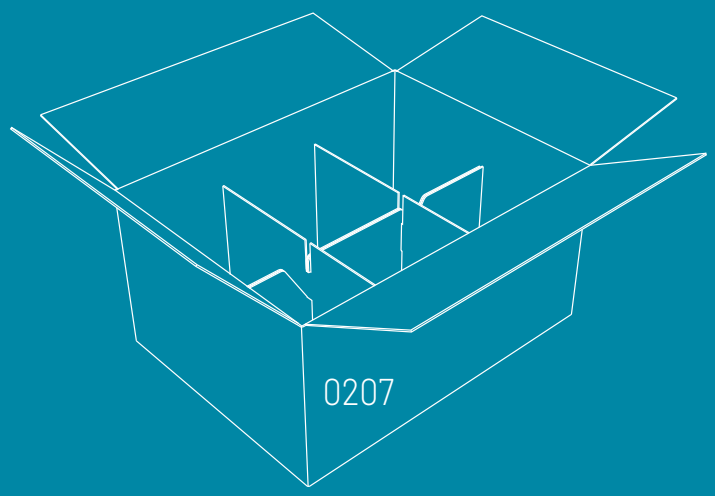

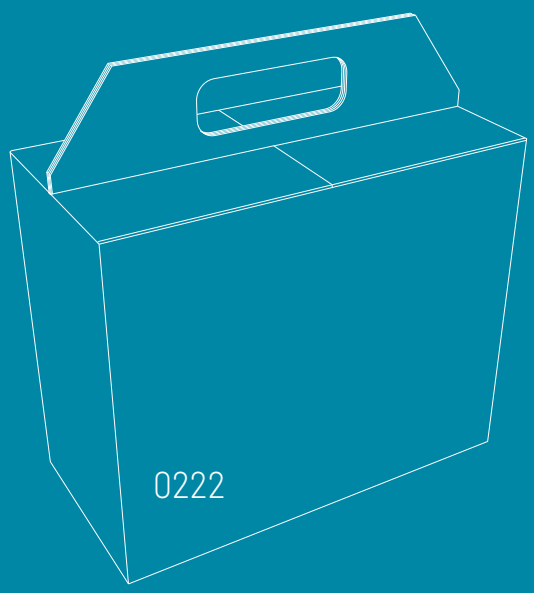

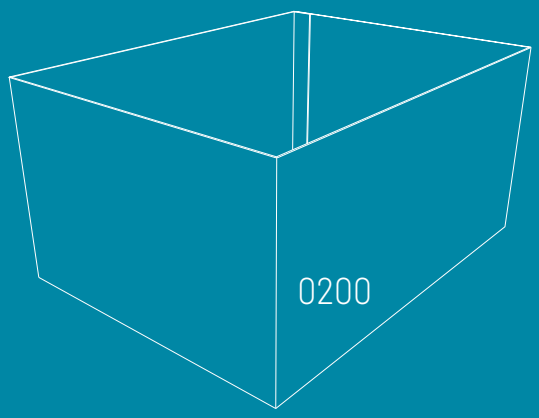

0200 M/A

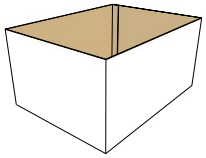

0201 M/A

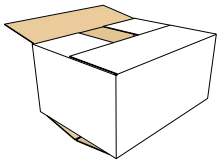

0202 M/A

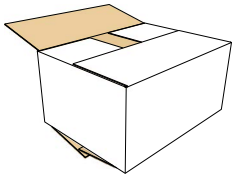

0203 M/A

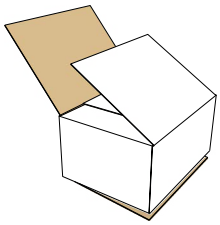

0204 M/A

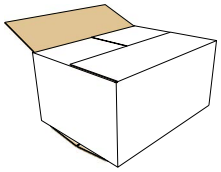

0205 M/A

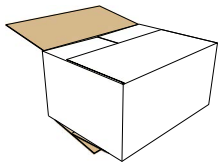

0206 M/A

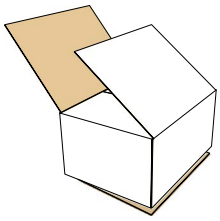

0207 M

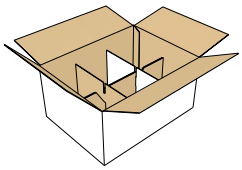

0208 M

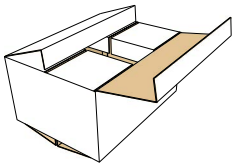

0209 M/A

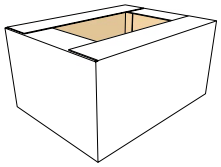

0210 M

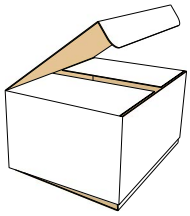

0211 M

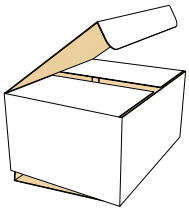

0212 M/A

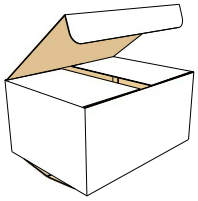

0214 M

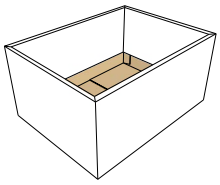

0215 M

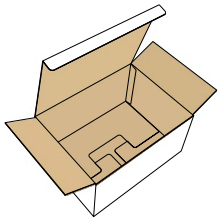

0216 M

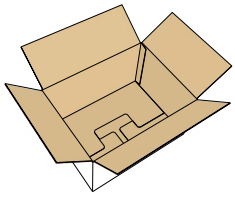

0217 M

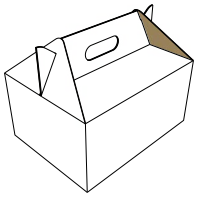

0218 M

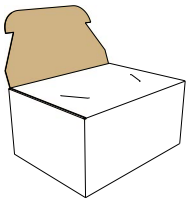

0219 M
NEW

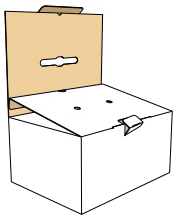

0220 M
NEW

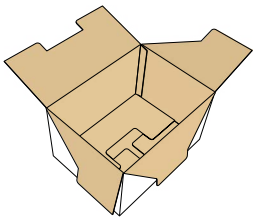

0221 M
NEW

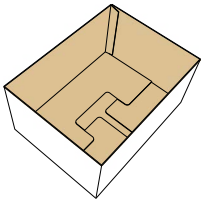

0222 M
NEW

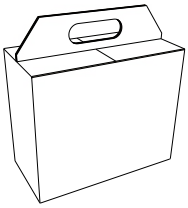

0225 M

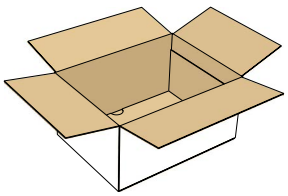

0226 M

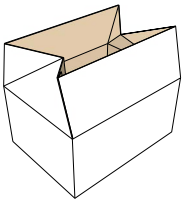

0227 M

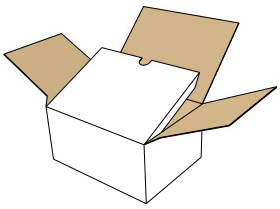

0228 M/A

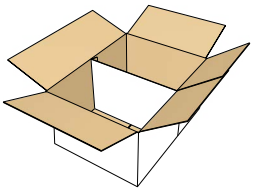

0229 M

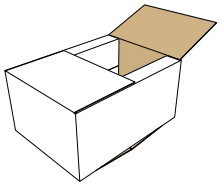

0229.1 M
NEW

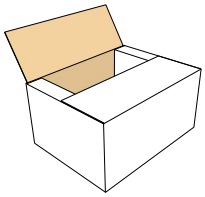

0230 M/A

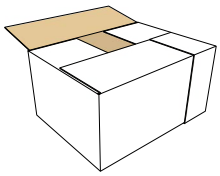

0231 M/A

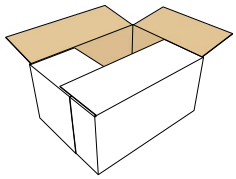

© 2022, 12th Edition - All rights reserved.

0232 M

NEW

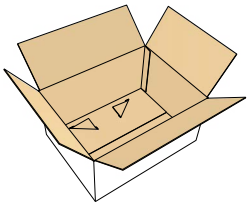

0233 M

NEW

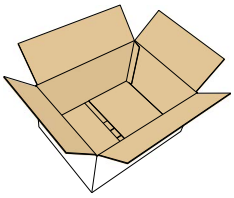

0233.1 M

NEW

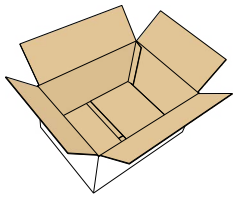

0240 M

NEW

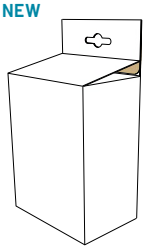

0241 M

NEW

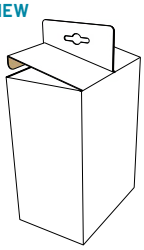

0242 M

NEW

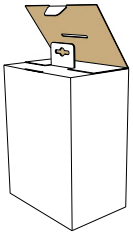

© 2022, 12th Edition - All rights reserved.

0200 M/A

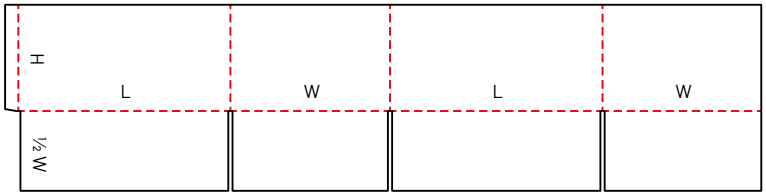

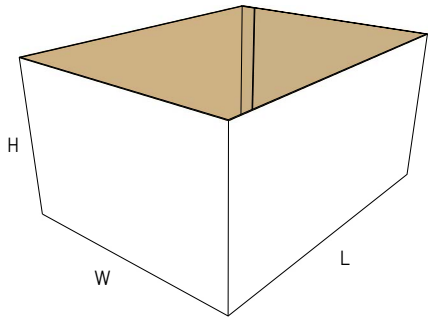

0201 M/A

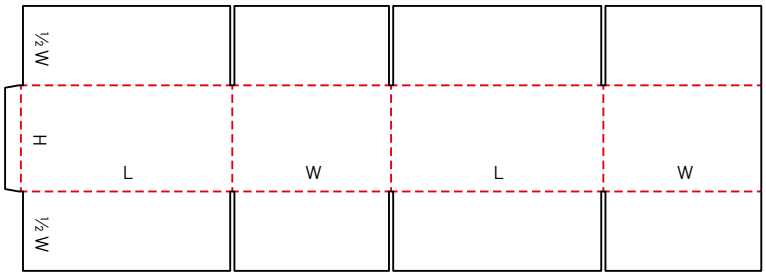

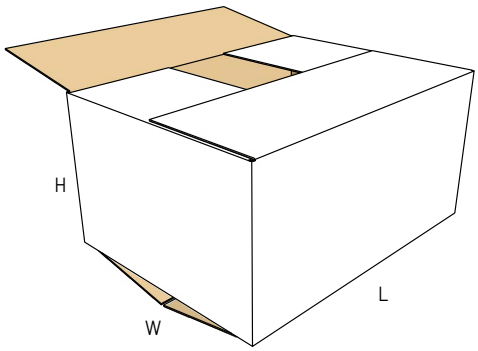

0202 M/A

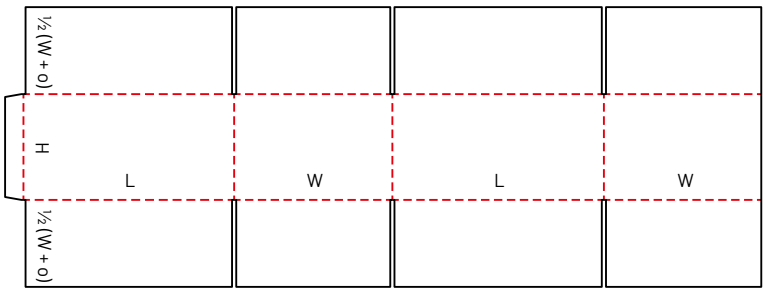

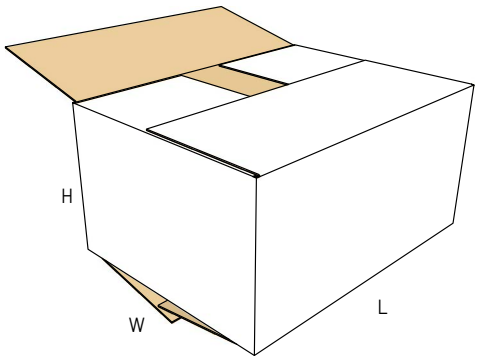

© 2022, 12th Edition - All rights reserved.

0203 M/A

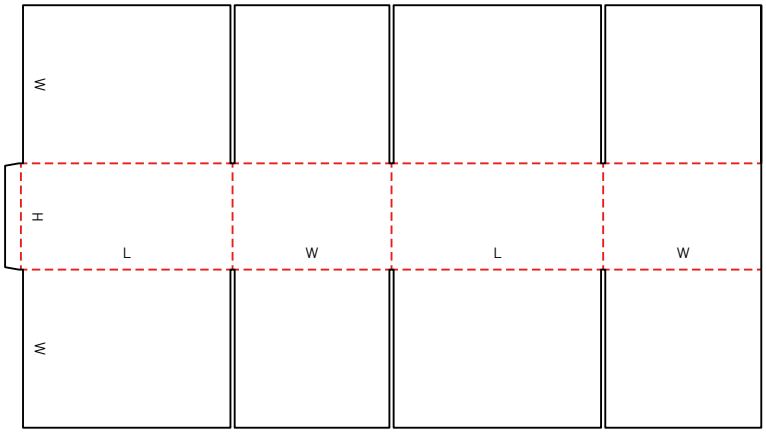

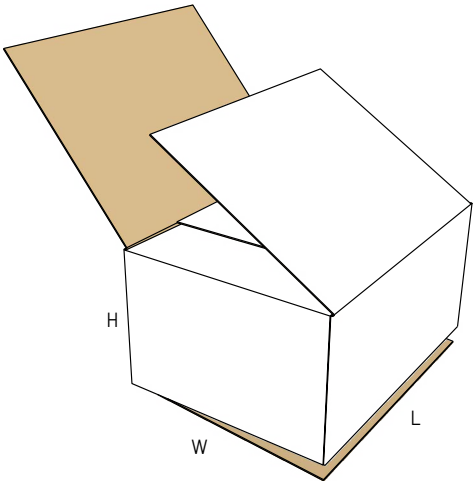

0204 M/A

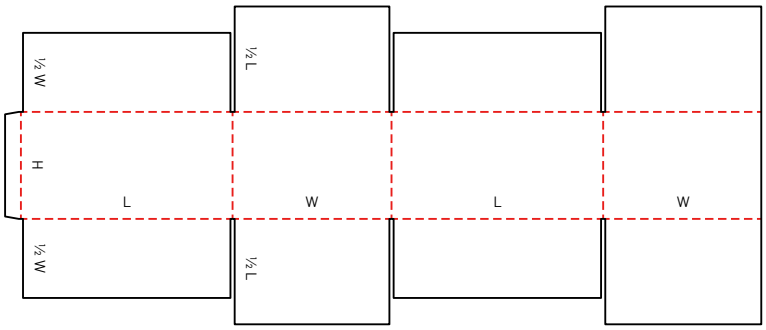

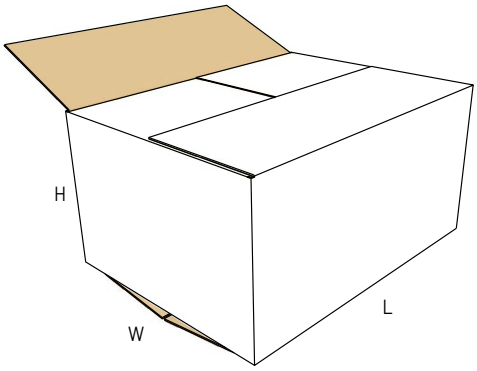

0205 M/A

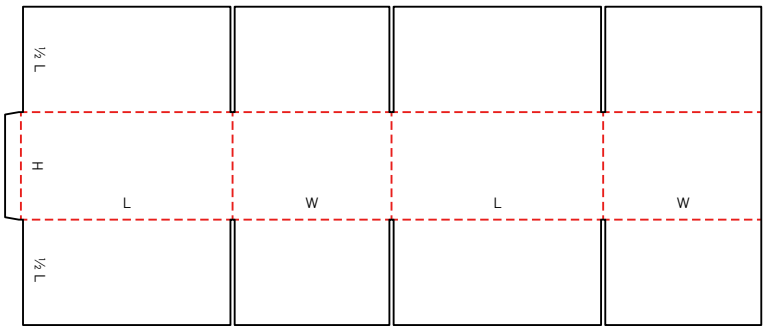

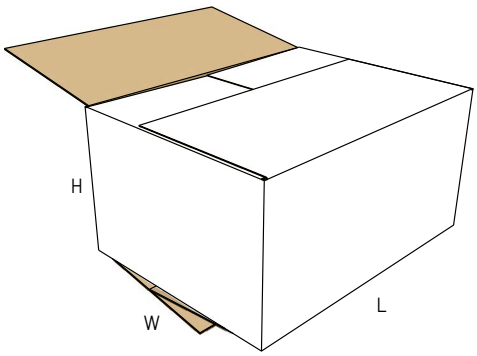

© 2022, 12th Edition - All rights reserved.

0206 M/A

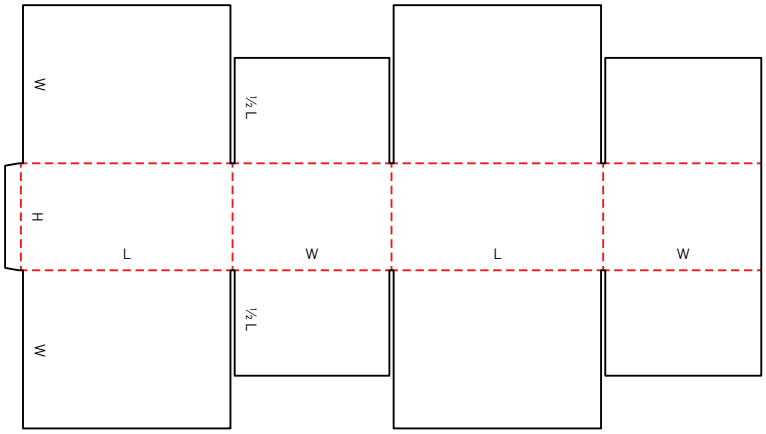

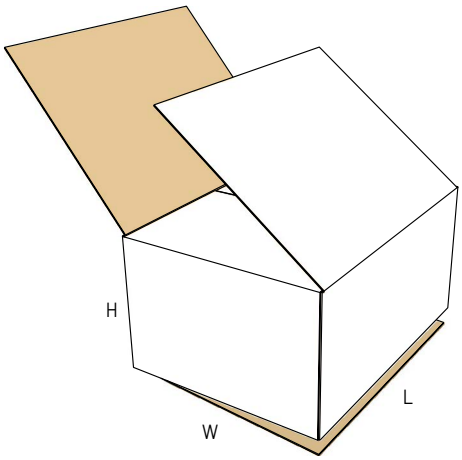

0207 M

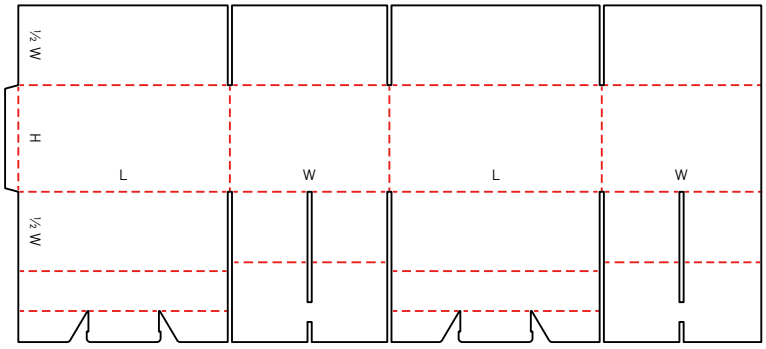

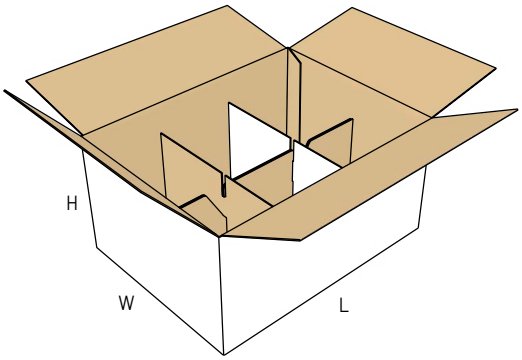

0208 M

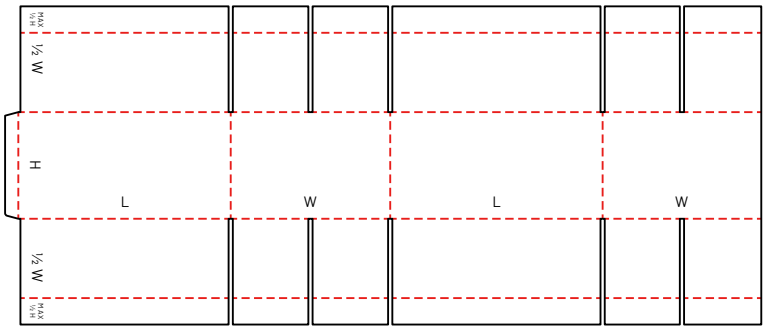

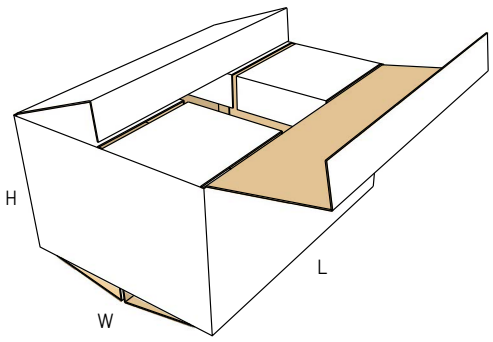

© 2022, 12th Edition - All rights reserved.

0209 M/A

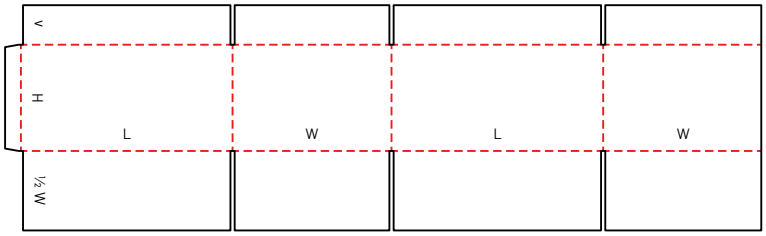

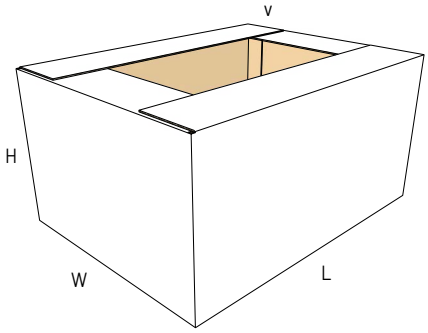

0210 M

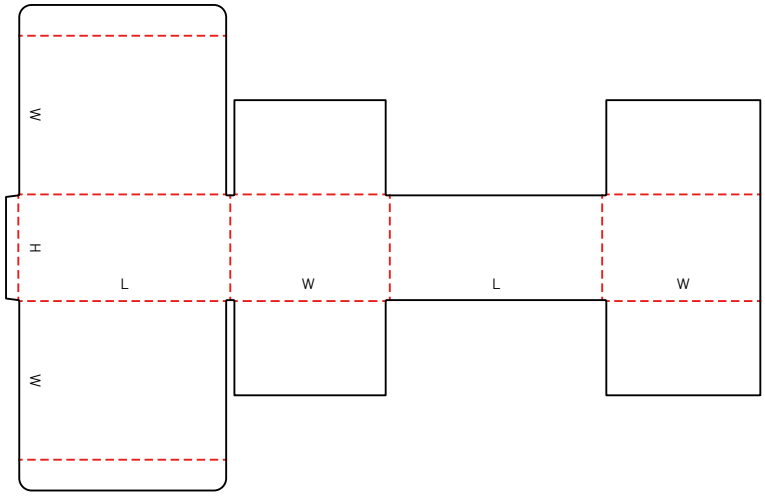

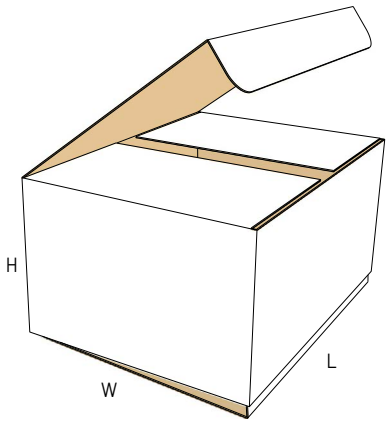

0211 M

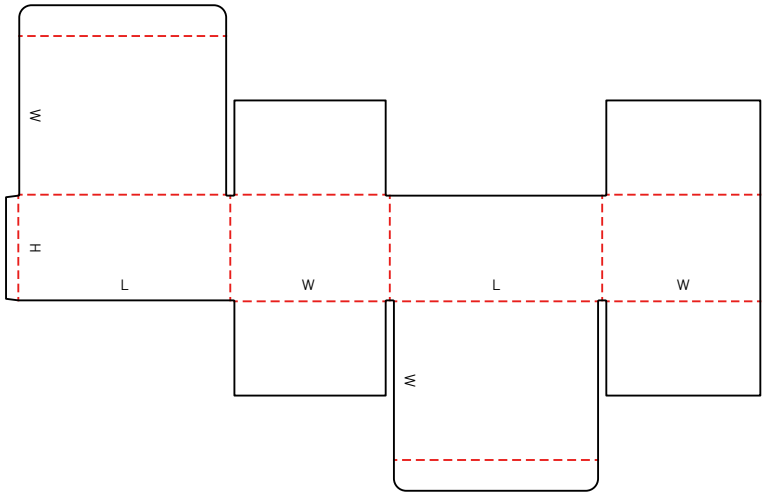

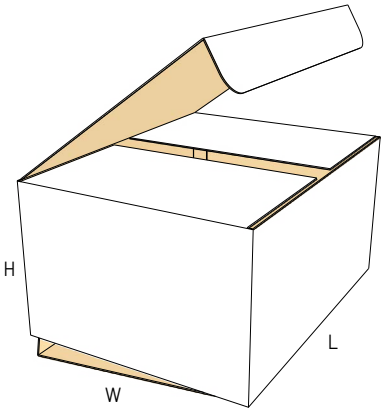

© 2022, 12th Edition - All rights reserved.

0212 M/A

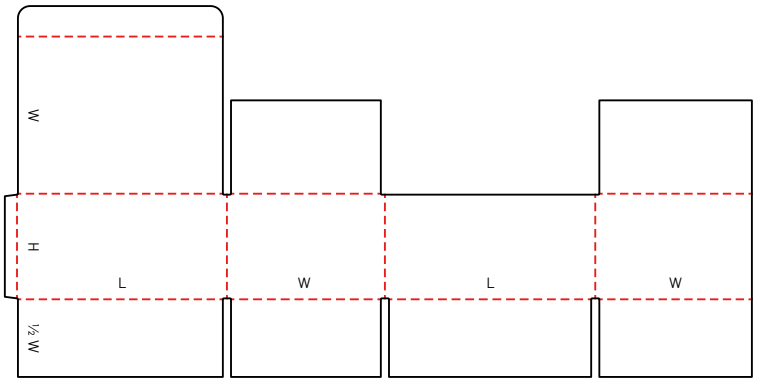

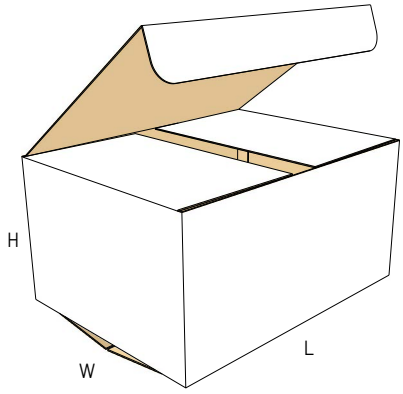

0214 M

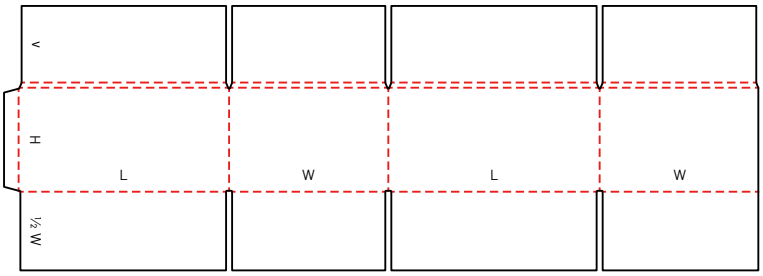

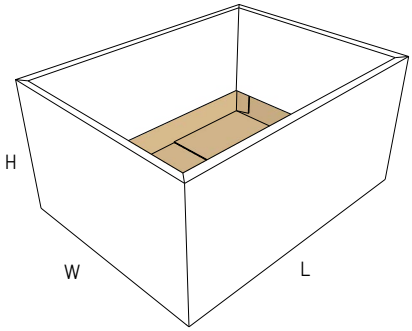

0215 M

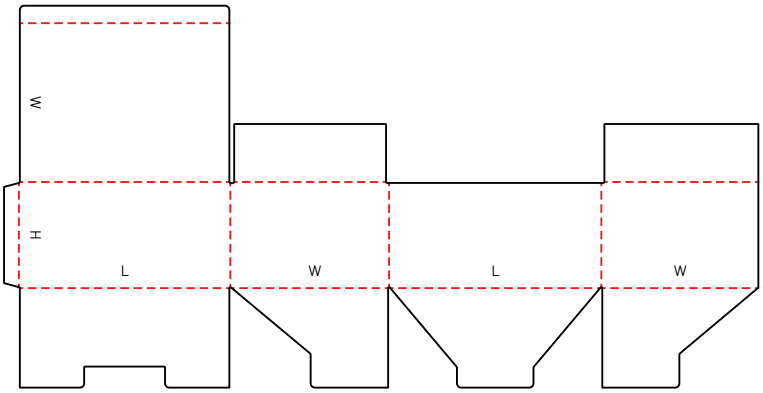

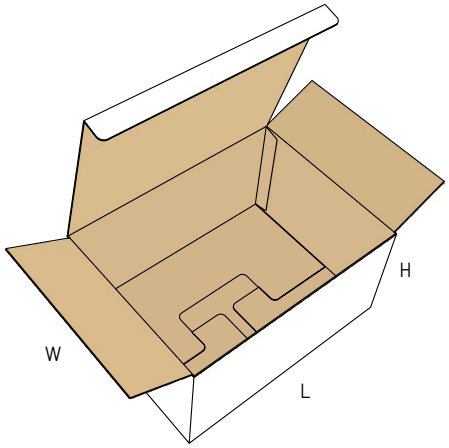

© 2022, 12th Edition - All rights reserved.

0216 M

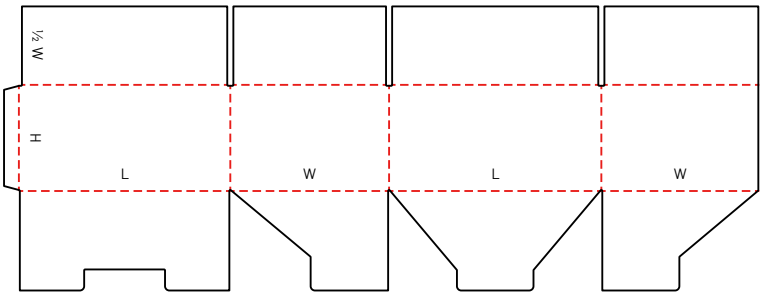

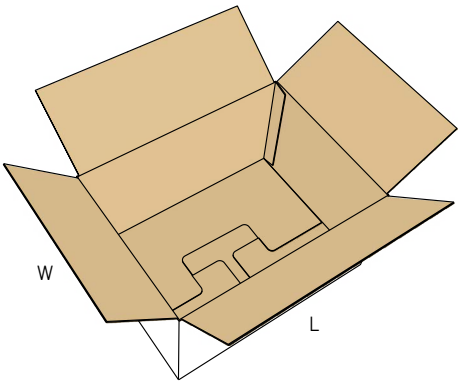

0217 M

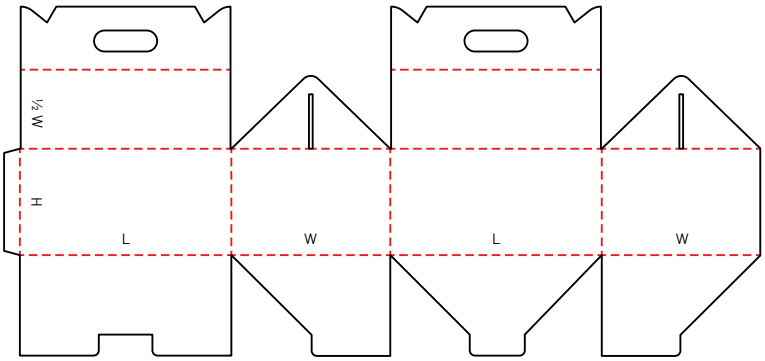

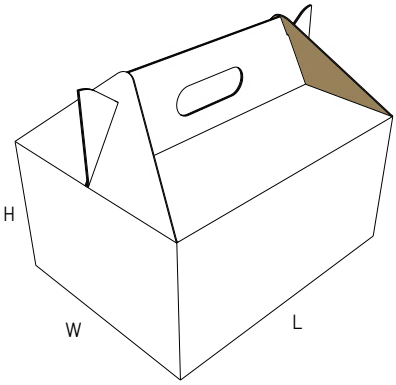

0218 M

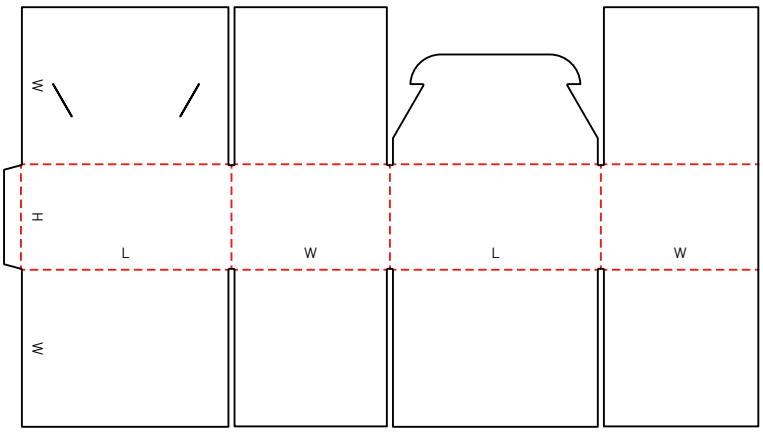

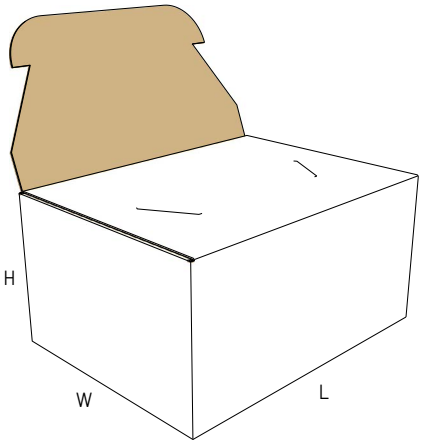

© 2022, 12th Edition - All rights reserved.

0219 M

NEW

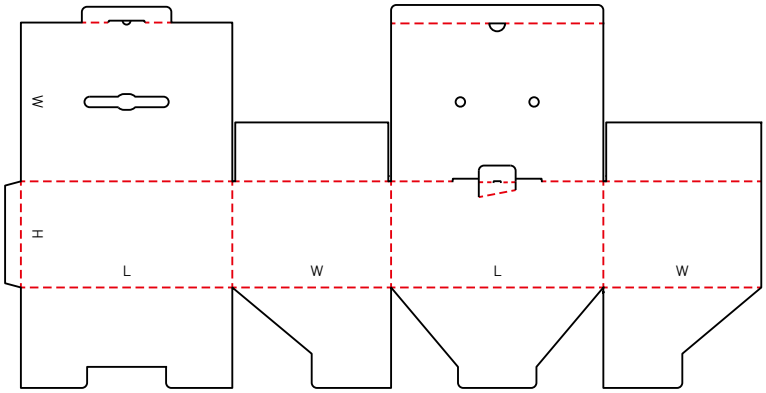

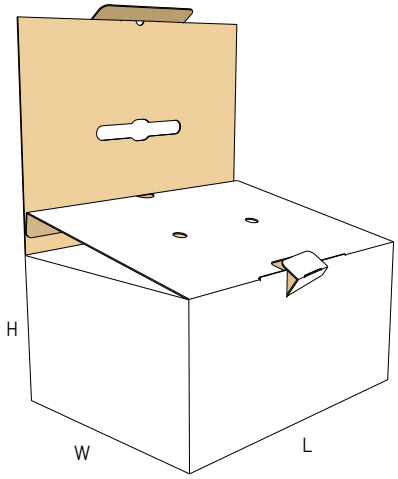

0220 M

NEW

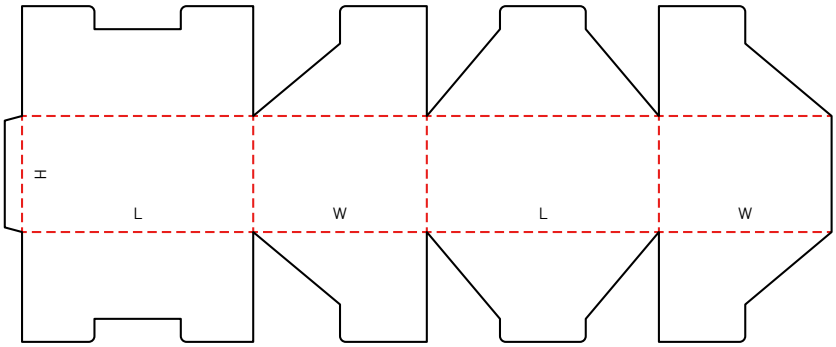

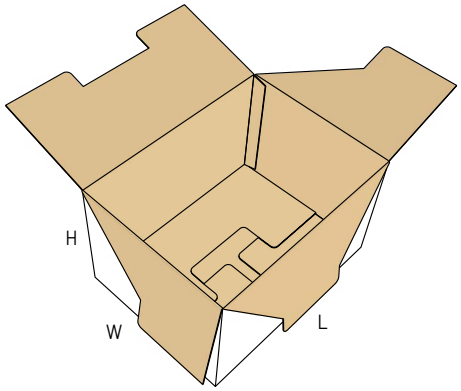

0221 M

NEW

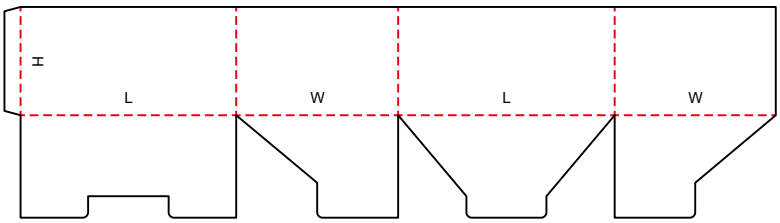

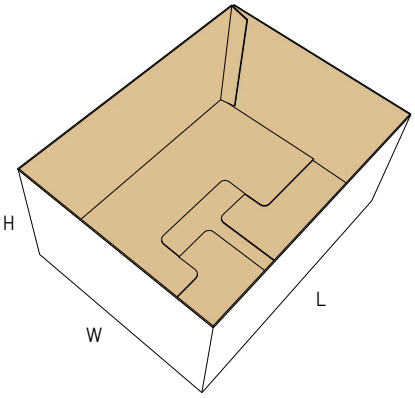

© 2022, 12th Edition - All rights reserved.

0222 M

NEW

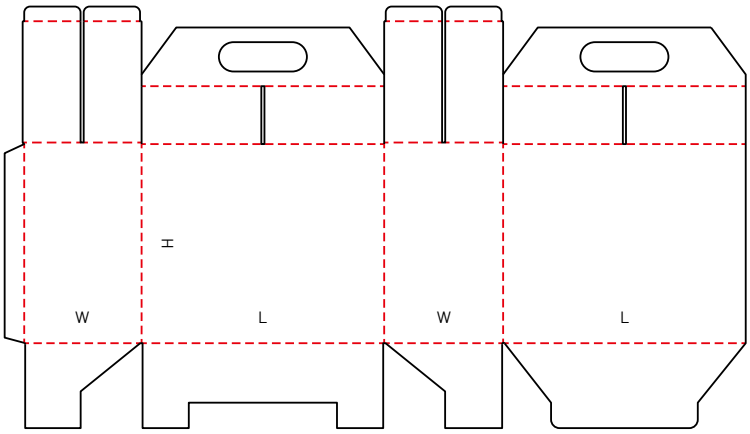

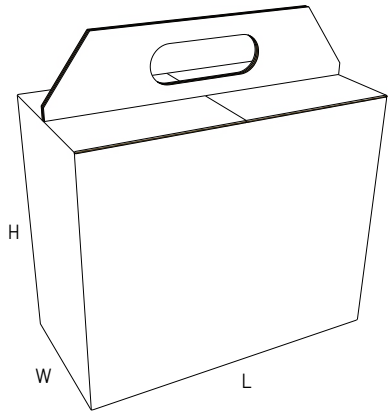

0225 M

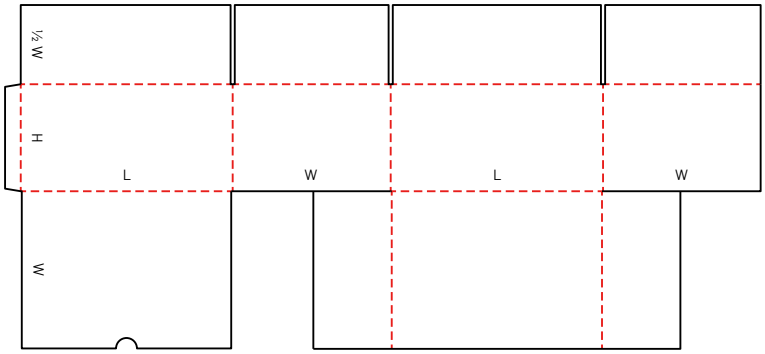

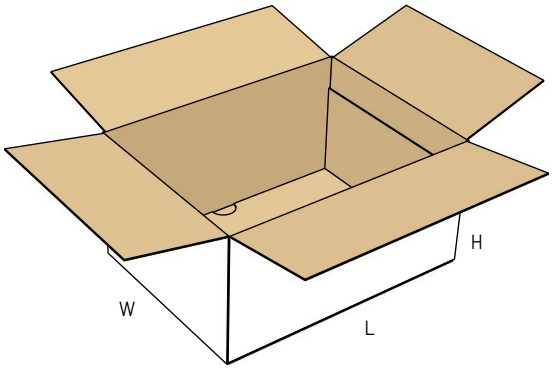

0226 M

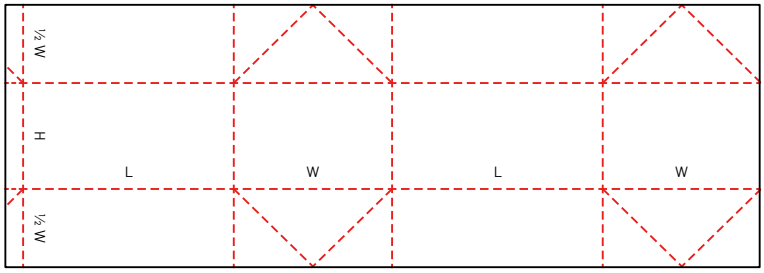

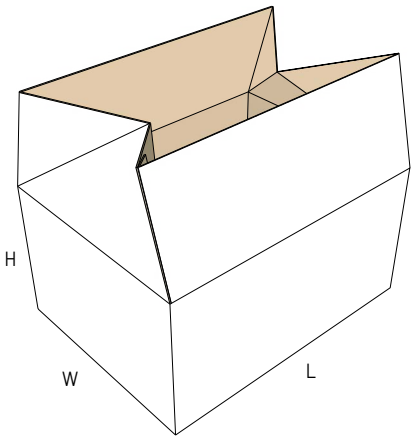

© 2022, 12th Edition - All rights reserved.

0227 M

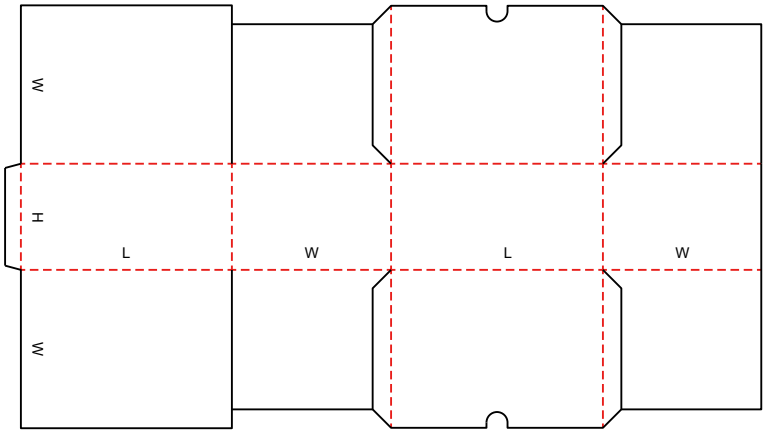

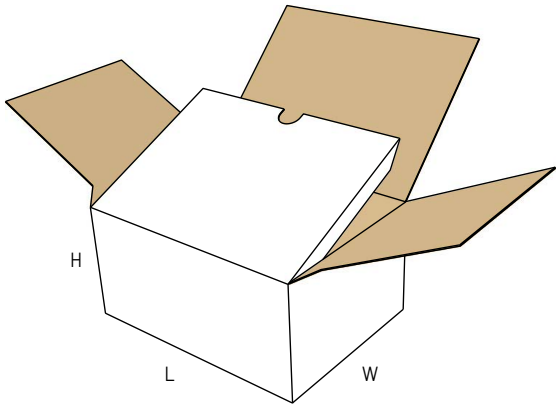

0228 M/A

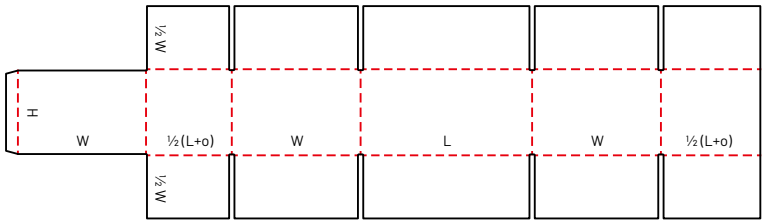

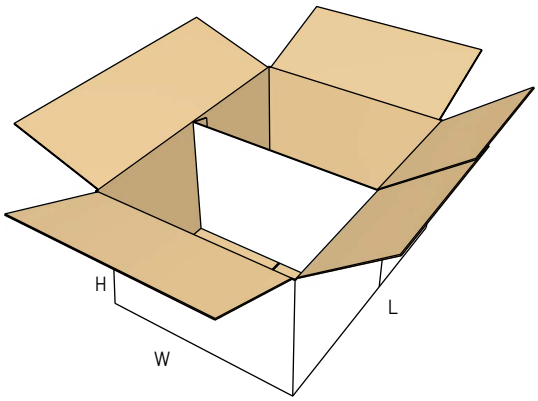

0229 M

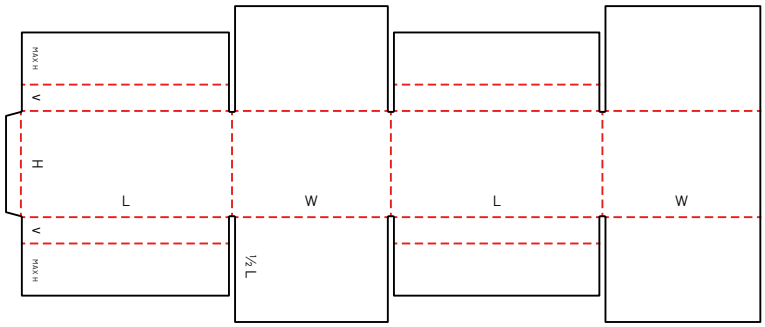

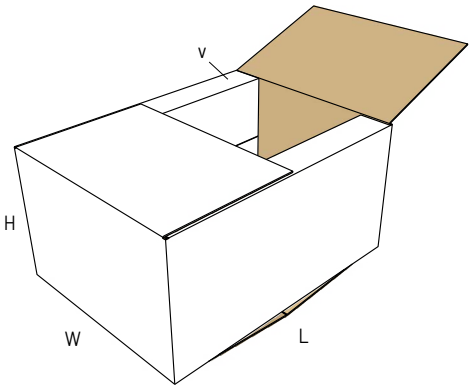

© 2022, 12th Edition - All rights reserved.

0229.1 M

NEW

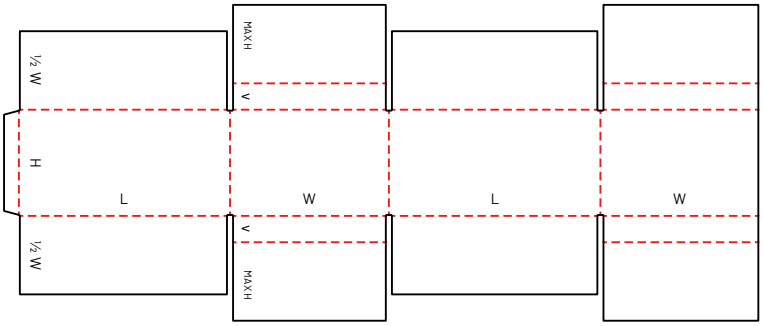

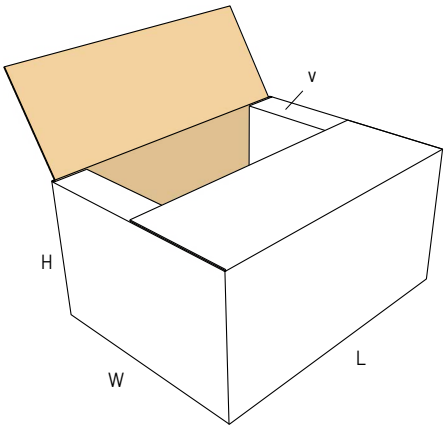

0230 M/A

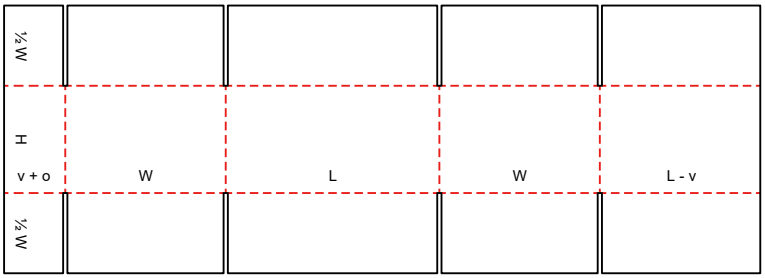

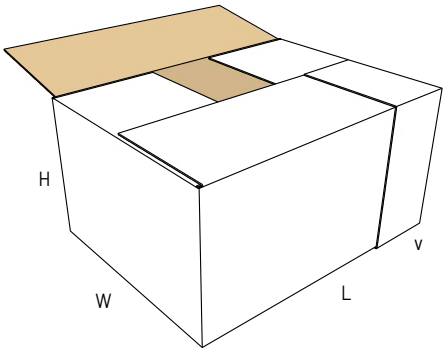

0231 M/A

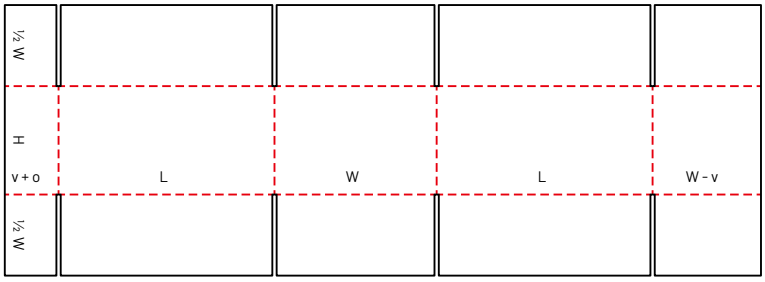

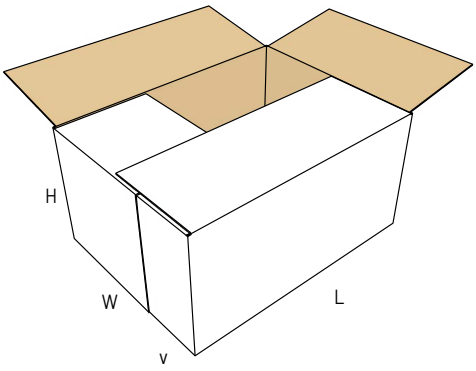

© 2022, 12th Edition - All rights reserved.

0232 M

NEW

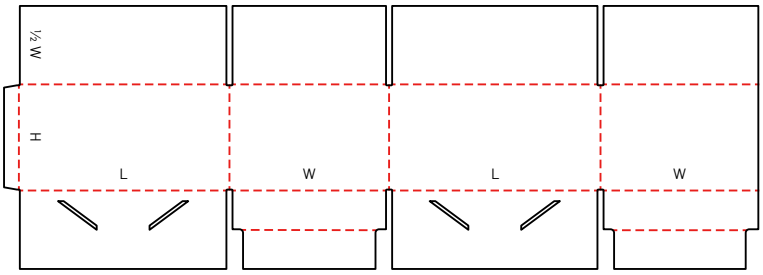

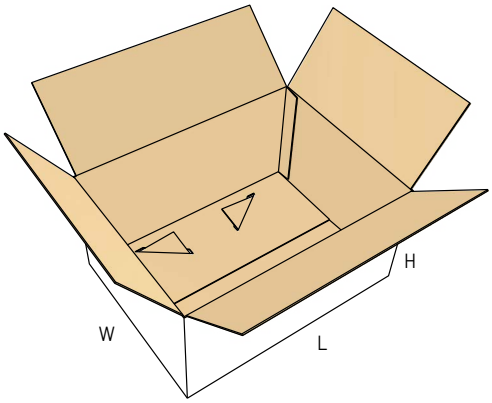

0233 M

NEW

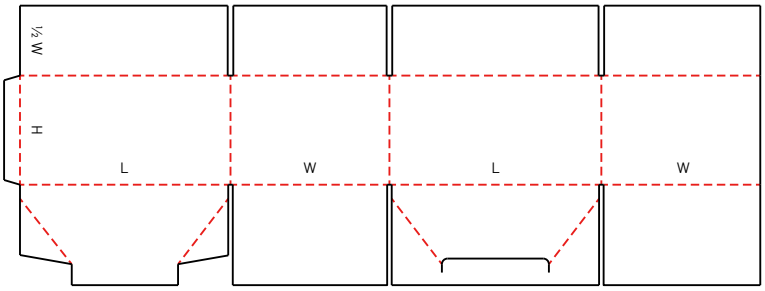

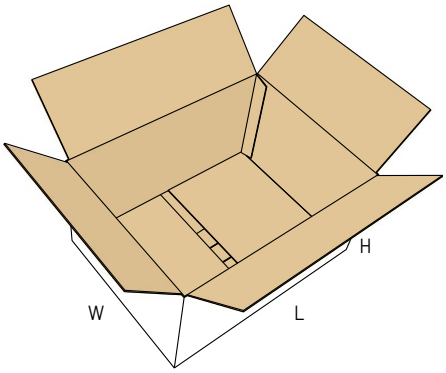

0233.1 M

NEW

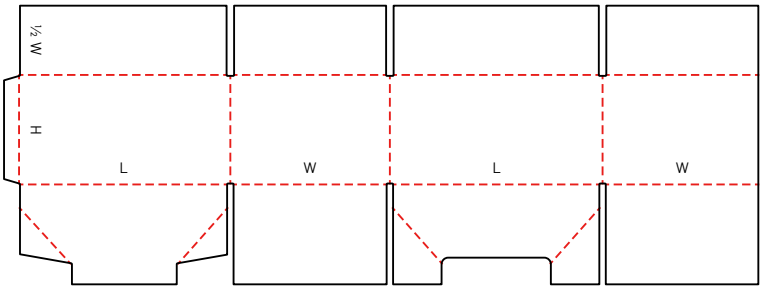

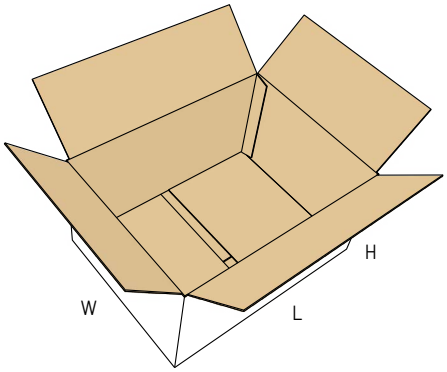

© 2022, 12th Edition - All rights reserved.

0240 M

NEW

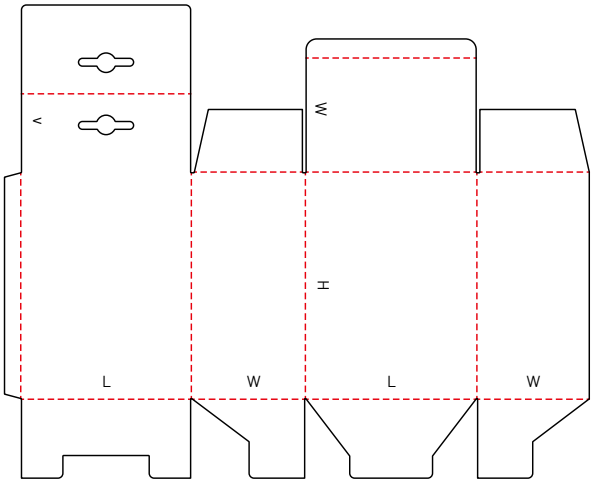

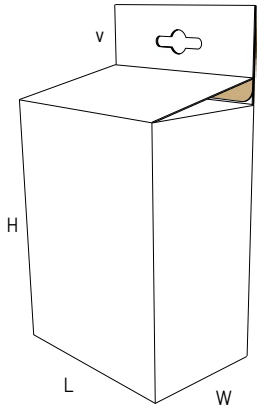

0241 M

NEW

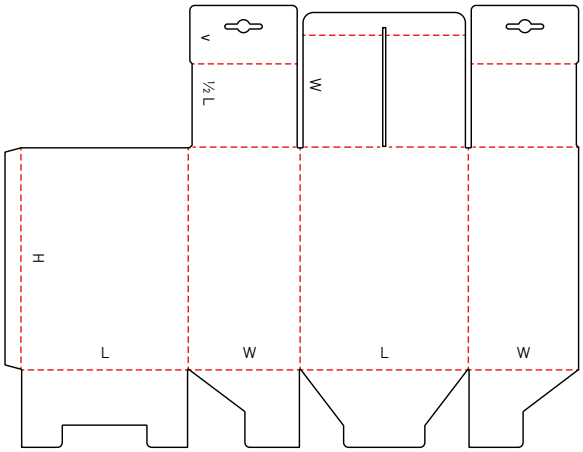

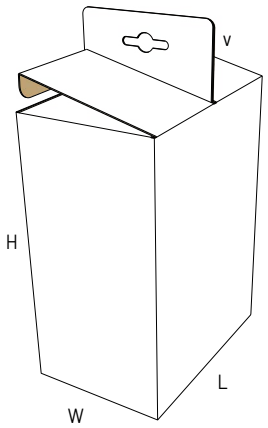

0242 M

NEW

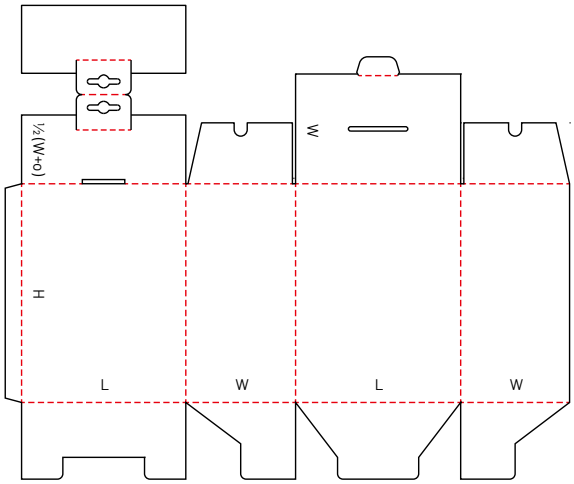

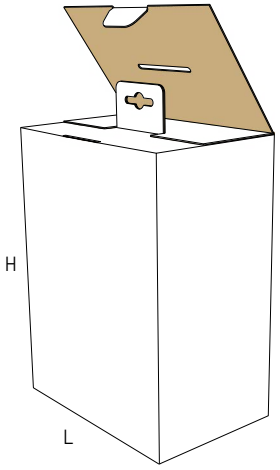

© 2022, 12th Edition - All rights reserved.

TELESCOPIC BOXES

Telescopic boxes usually consist of more than one piece (e.g. top and bottom) and they fit over each other.

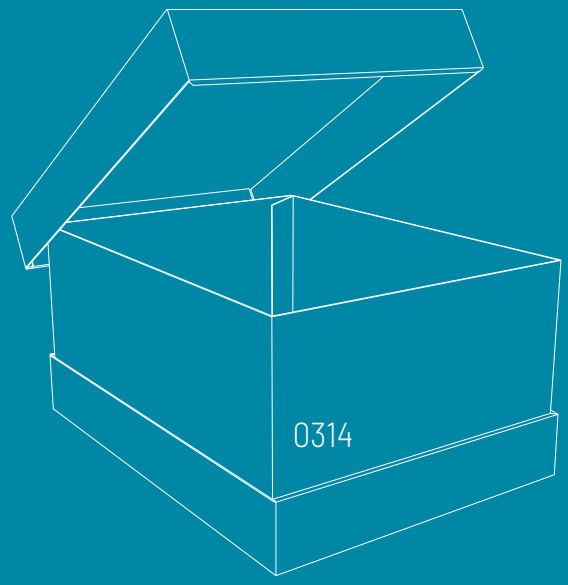

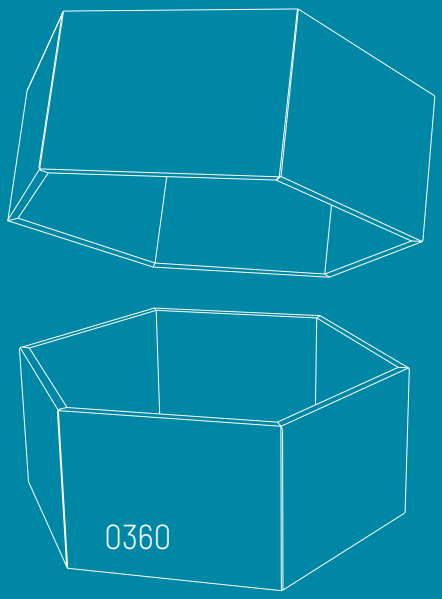

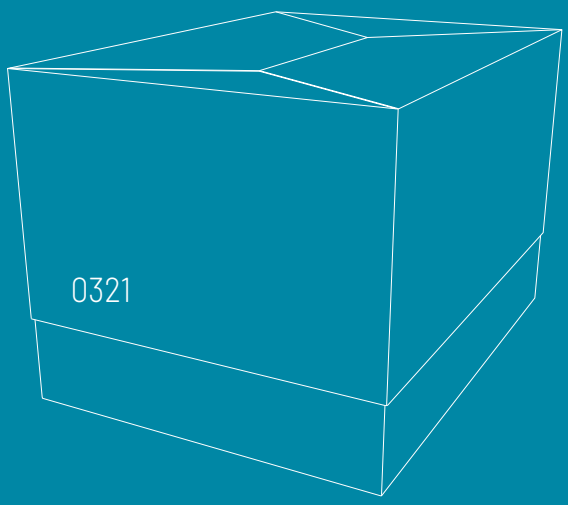

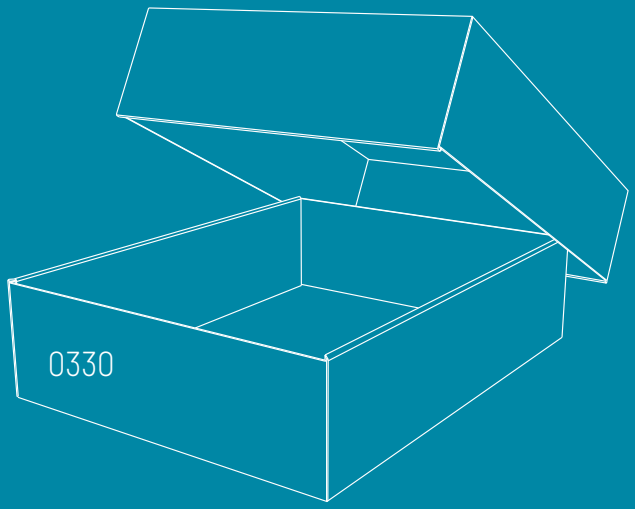

0300 M/A

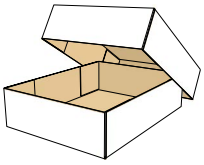

0301 M/A

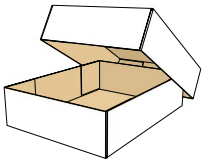

0302 M

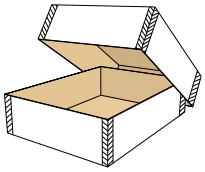

0303 M

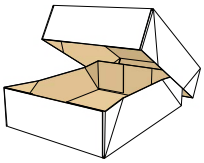

0304 M

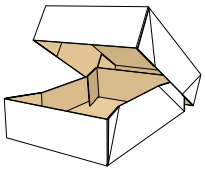

0306 M/A

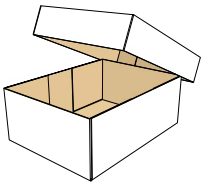

0307 M

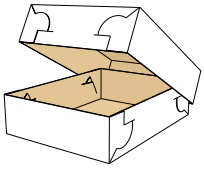

0308 M

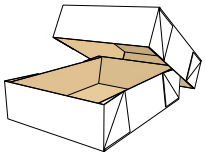

0309 M

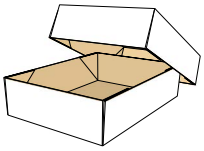

0310 M/A

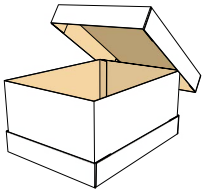

0312 M/A

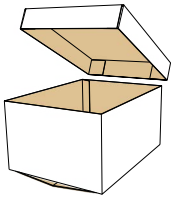

0313 M/A

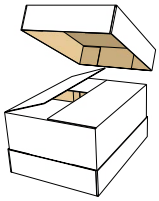

0314 M

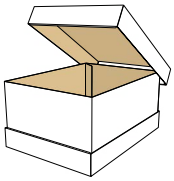

0319 M/A
NEW

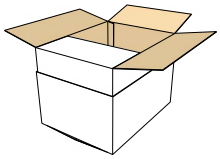

0320 M/A

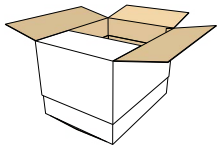

0321 M

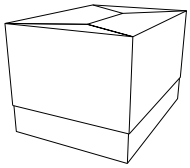

0322 M

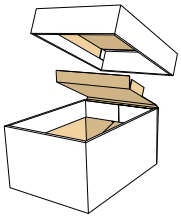

0323 M

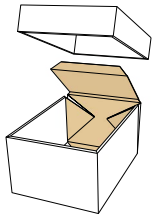

0325 M/A

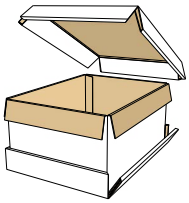

0330 M/A

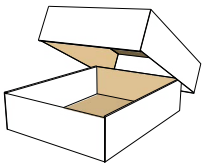

0331 M/A

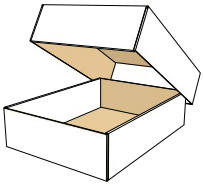

0350 A

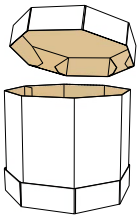

0351 M/A

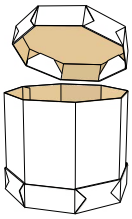

0352 M/A

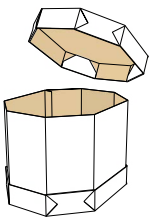

0360 M
NEW

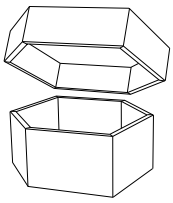

© 2022, 12th Edition - All rights reserved.

0300 M/A

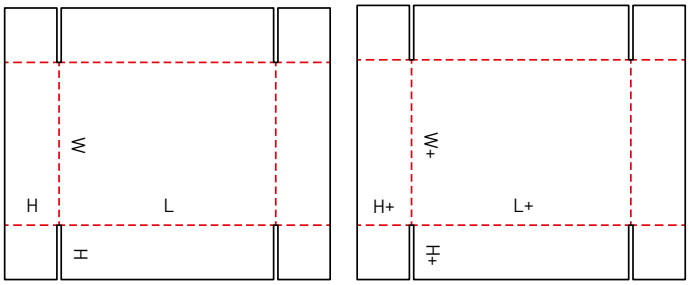

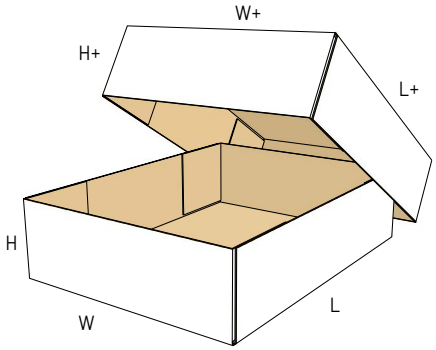

0301 M/A

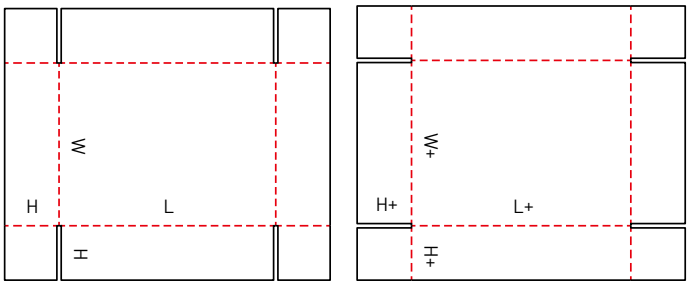

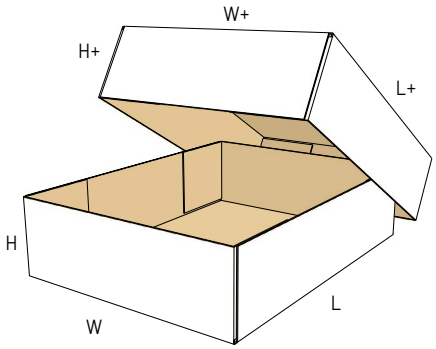

0302 M

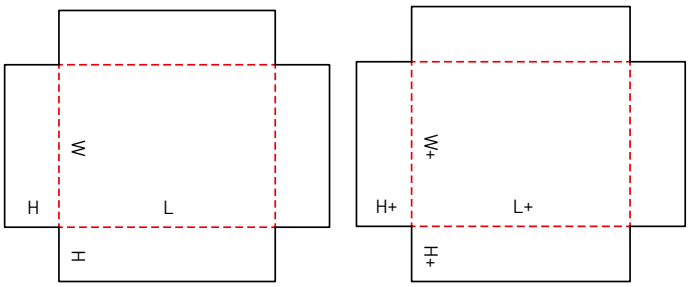

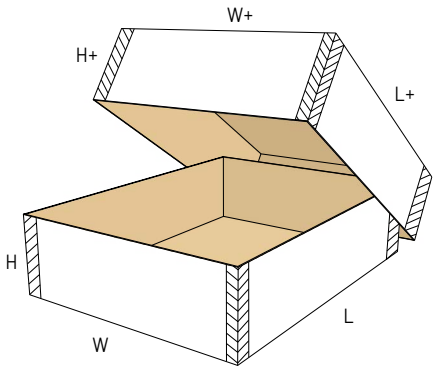

© 2022, 12th Edition - All rights reserved.

0303 M

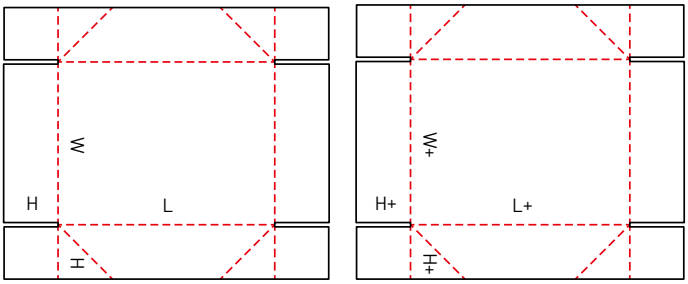

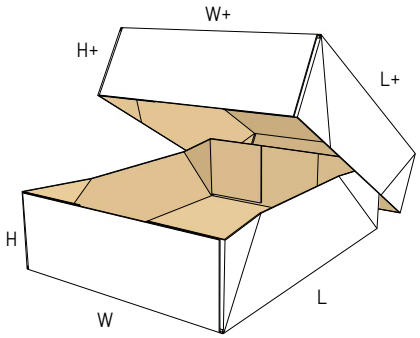

0304 M

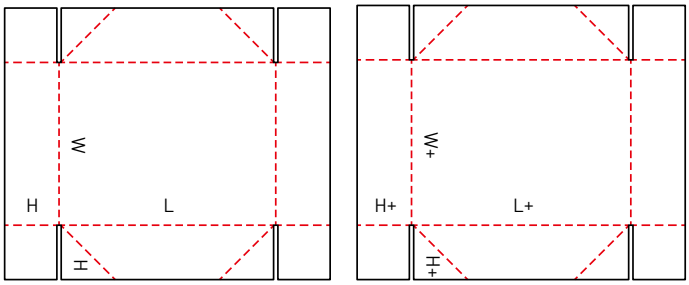

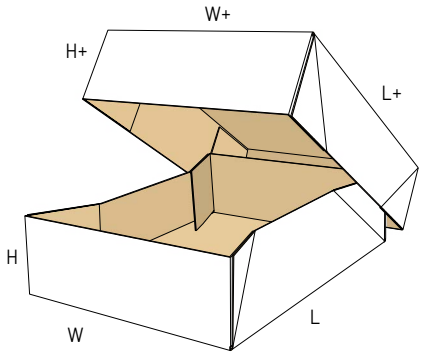

0306 M/A

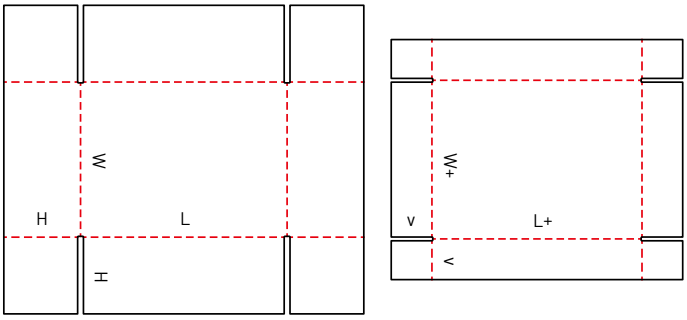

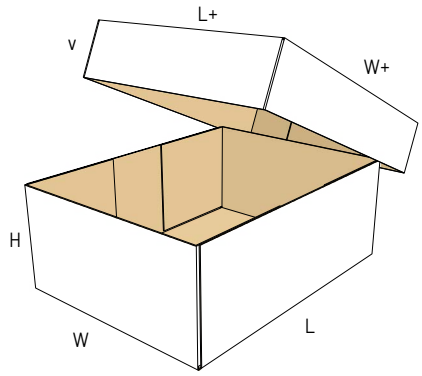

© 2022, 12th Edition - All rights reserved.

0307 M

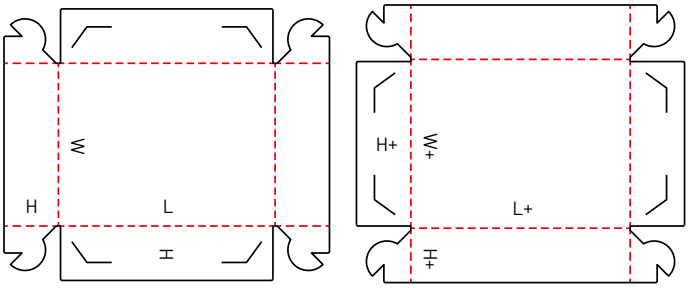

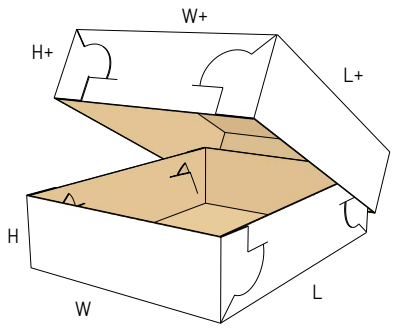

0308 M

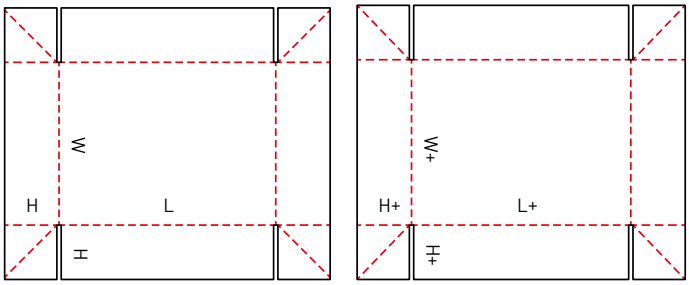

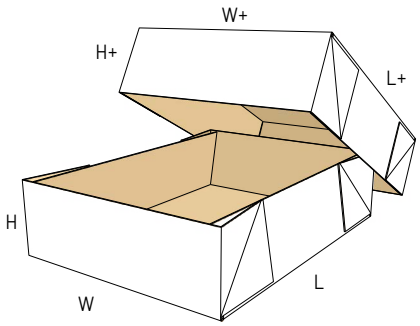

0309 M

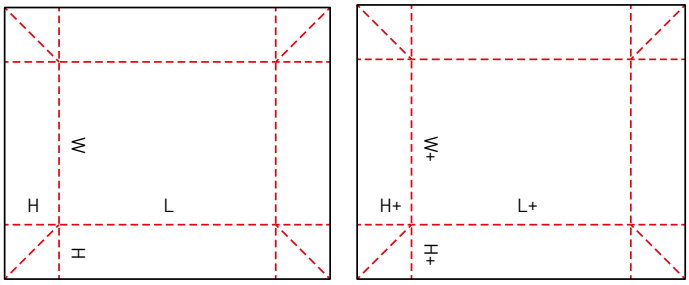

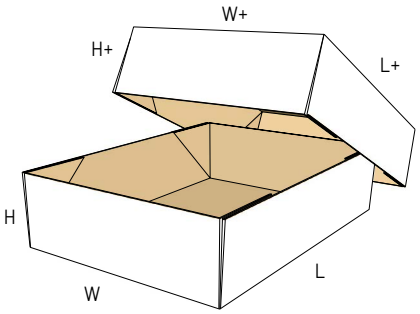

© 2022, 12th Edition - All rights reserved.

0310 M/A

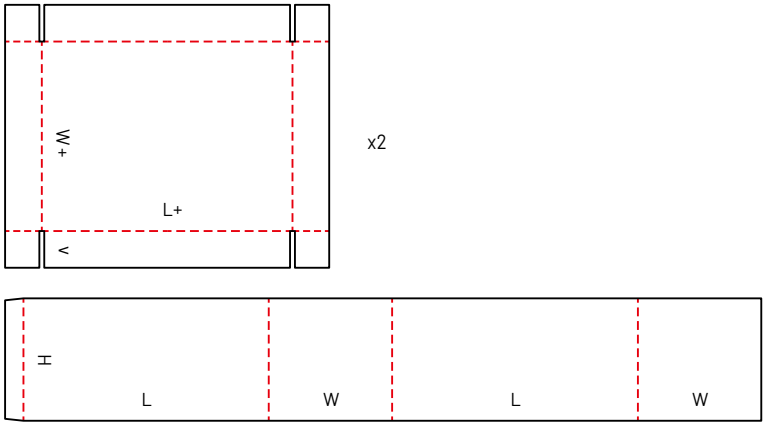

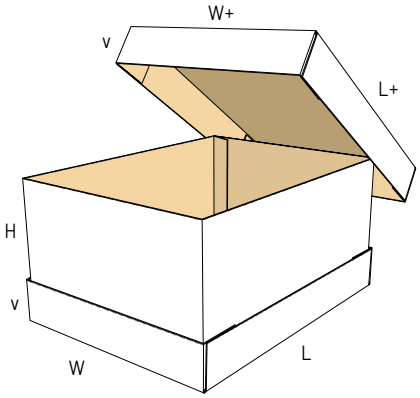

0312 M/A

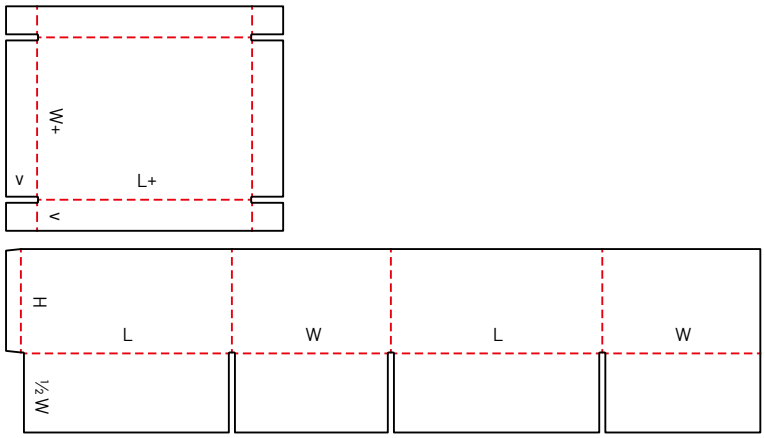

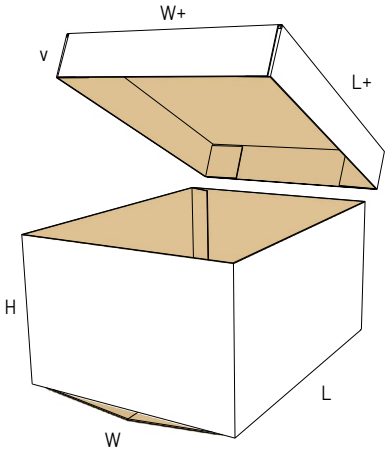

0313 M/A

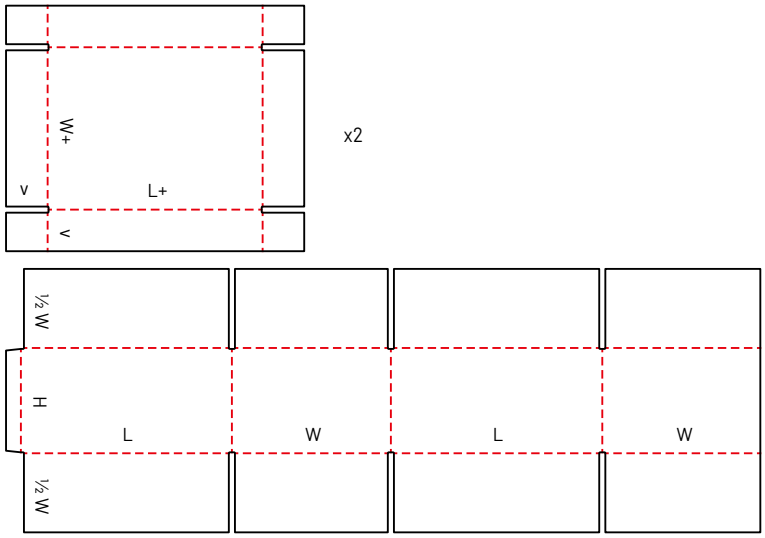

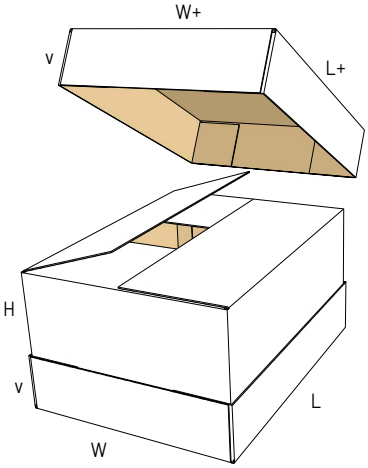

© 2022, 12th Edition - All rights reserved.

0314 M

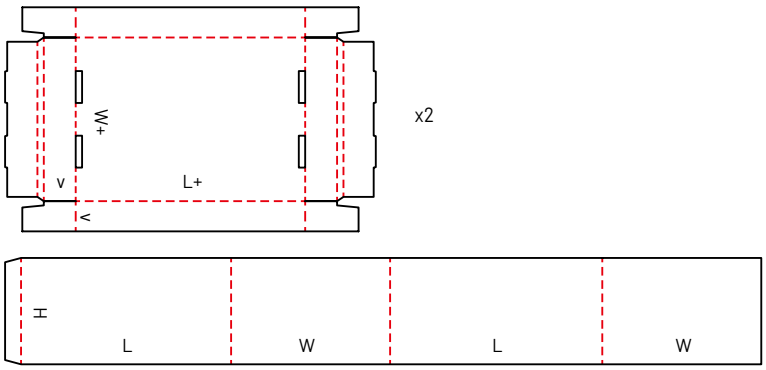

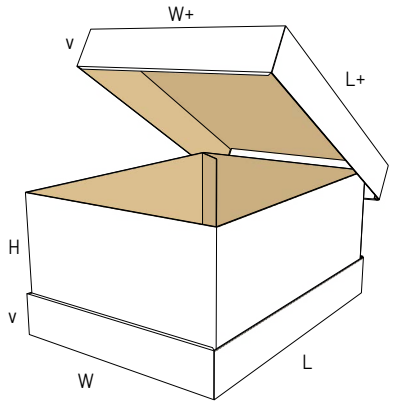

0319 M/A

NEW

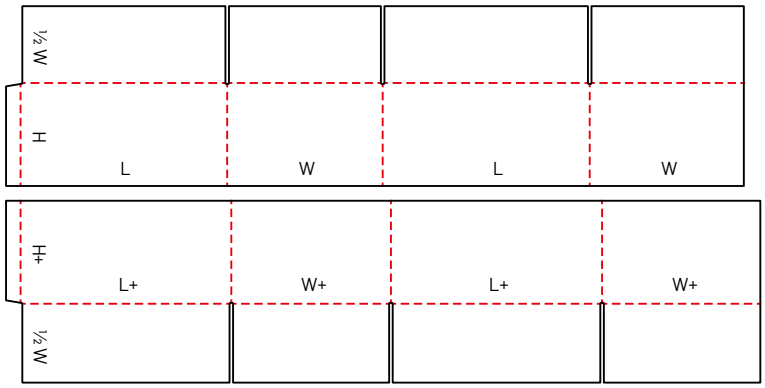

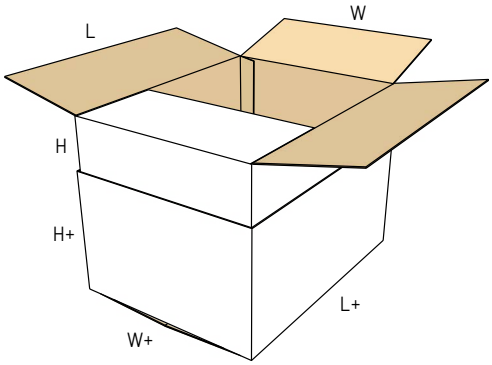

0320 M/A

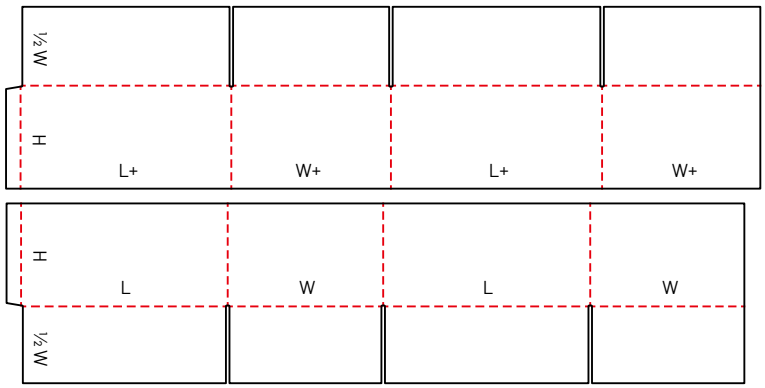

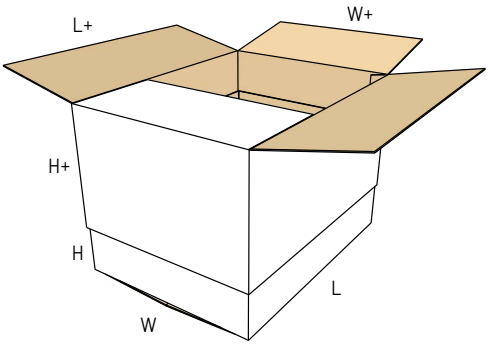

© 2022, 12th Edition - All rights reserved.

0321 M

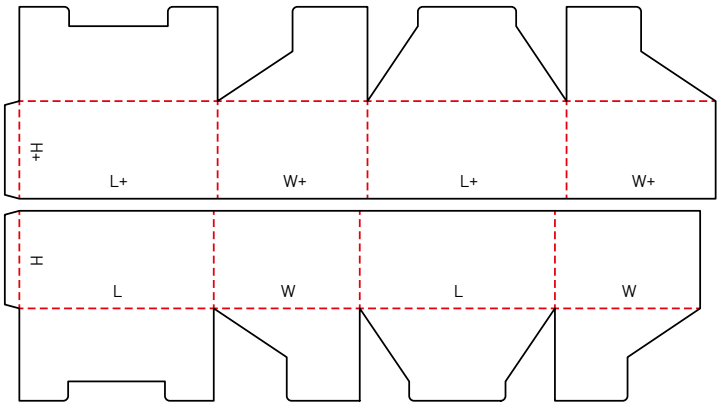

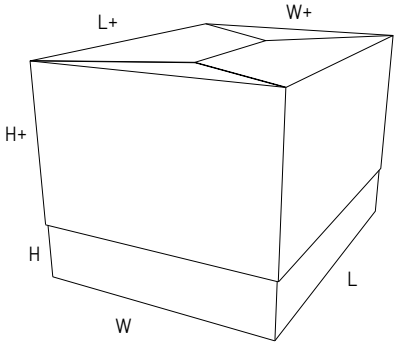

0322 M

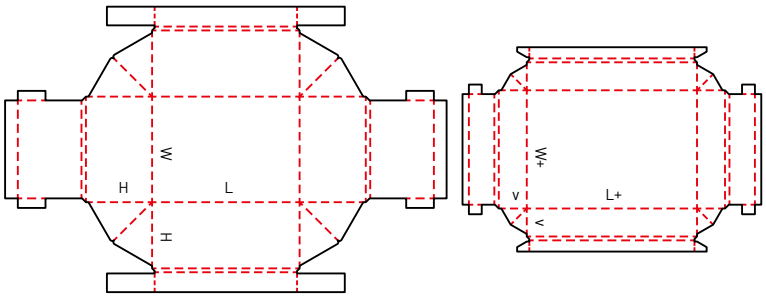

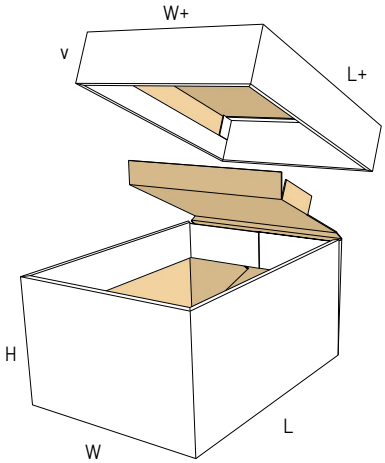

0323 M

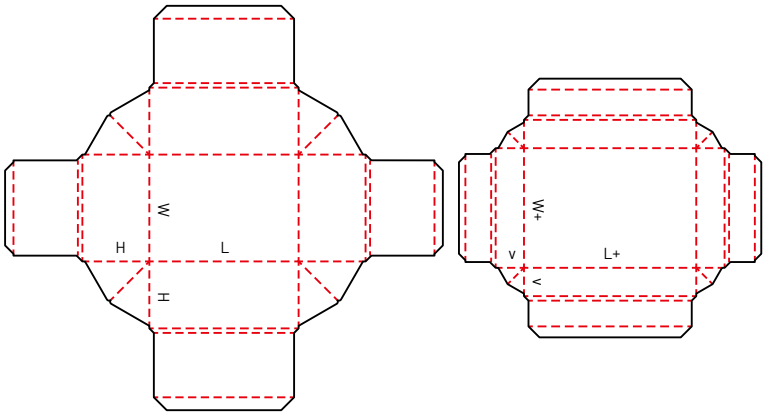

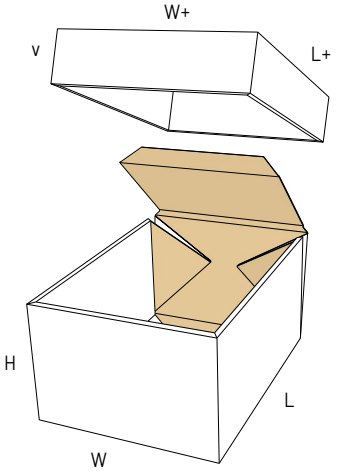

© 2022, 12th Edition - All rights reserved.

0325 M/A

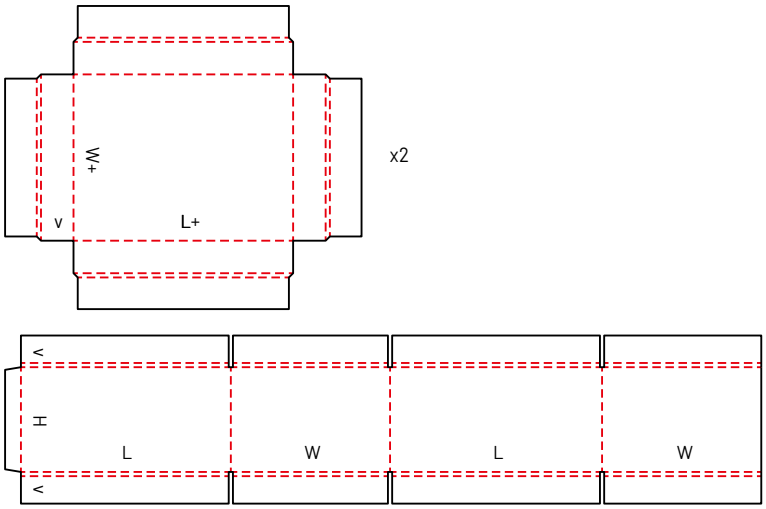

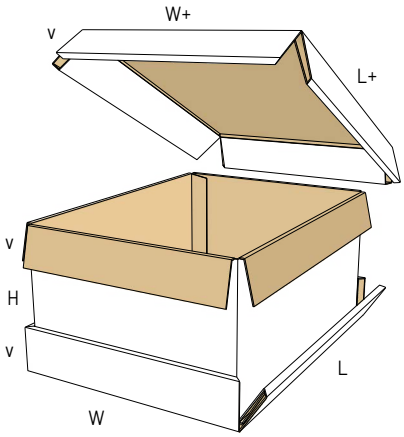

0330 M/A

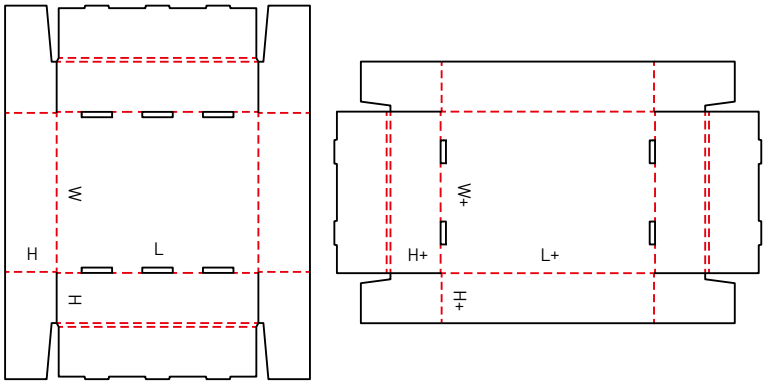

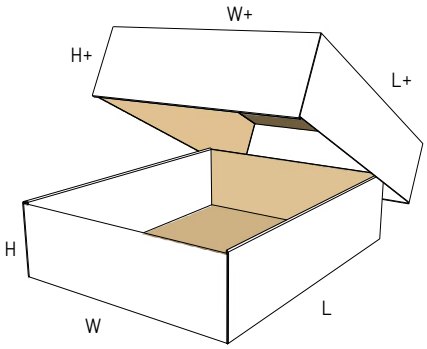

0331 M/A

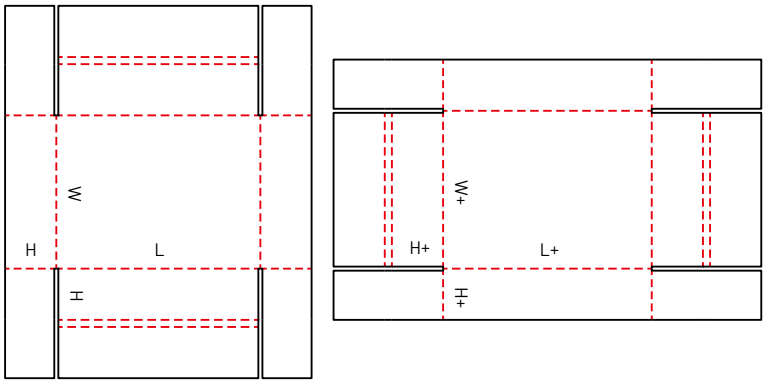

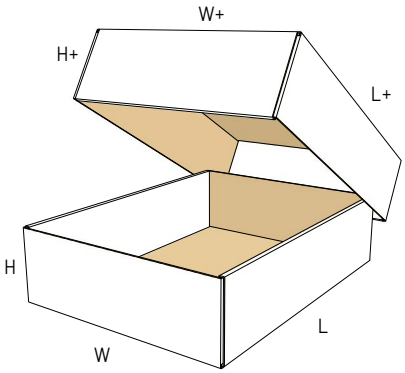

© 2022, 12th Edition - All rights reserved.

0350 A

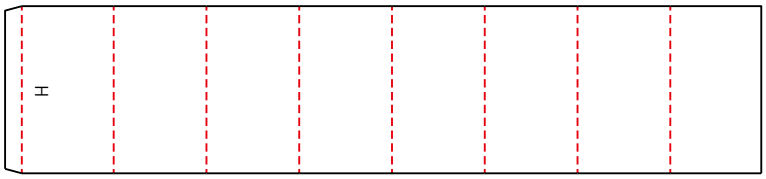

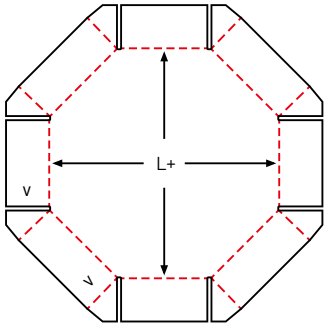

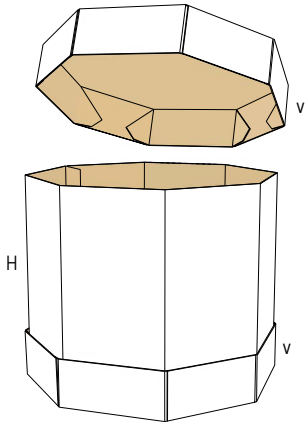

0351 M/A

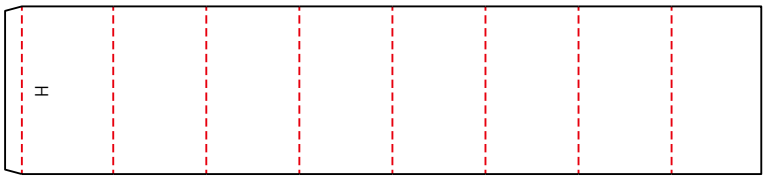

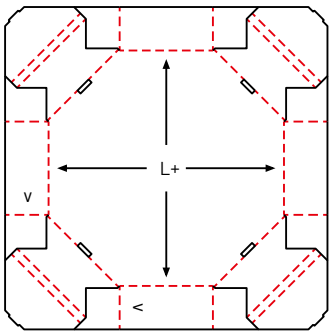

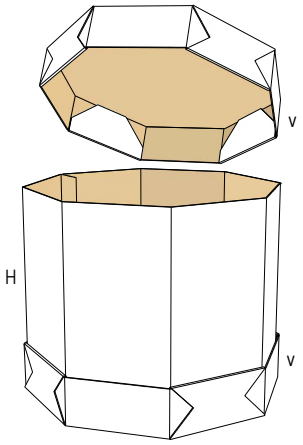

0352 M/A

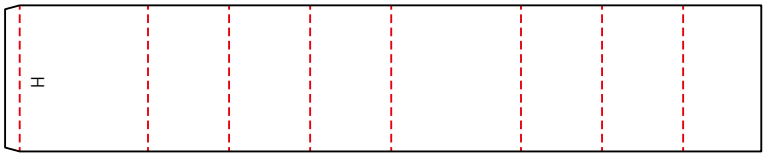

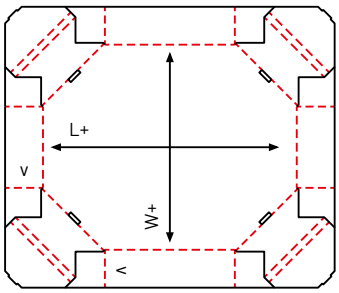

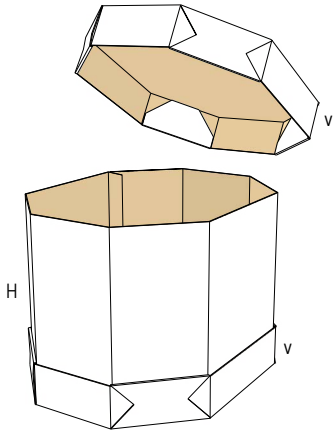

© 2022, 12th Edition - All rights reserved.

0360 M

NEW

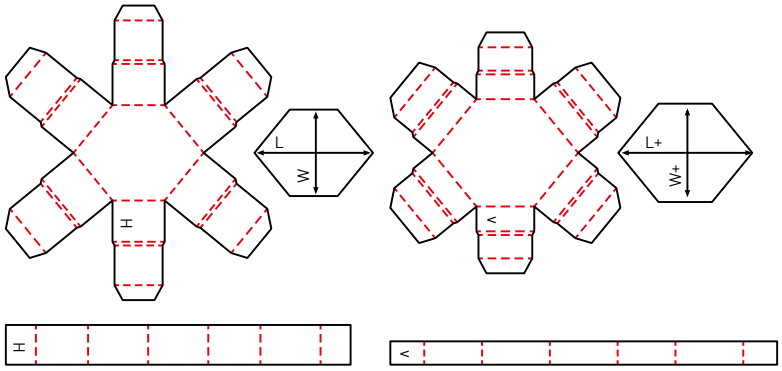

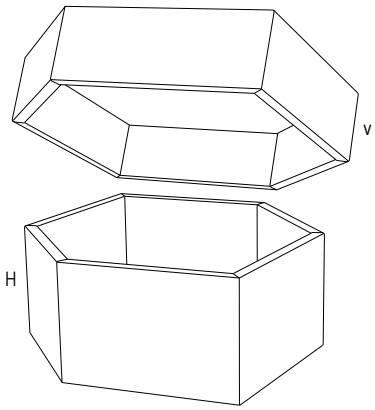

© 2022, 12th Edition - All rights reserved.

FOLDER BOXES AND TRAYS

Folder boxes and trays are usually made from one piece of board. The bottom of the box is hinged to form two or all side walls and the cover. Locking tabs, handles, display panels, etc. can be incorporated in some designs.

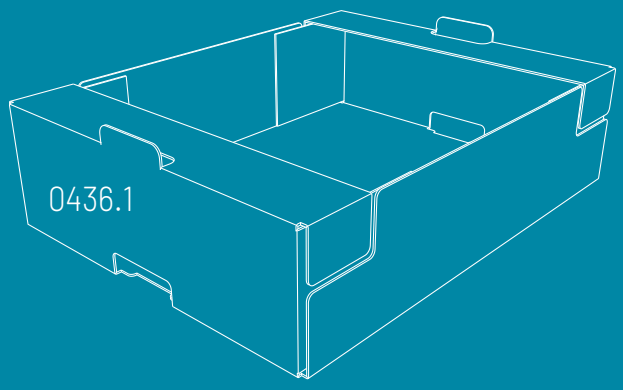

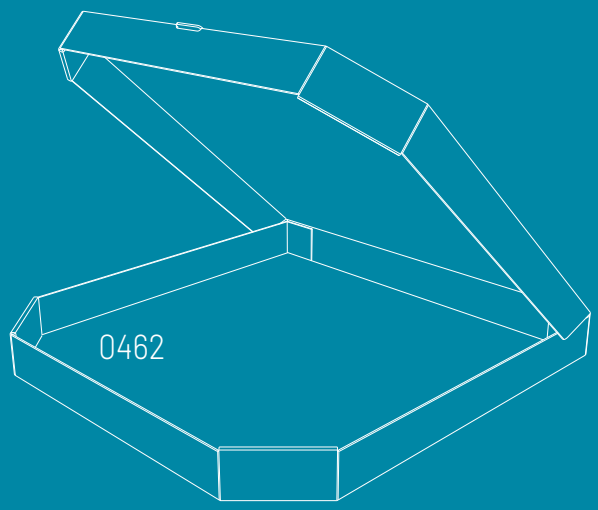

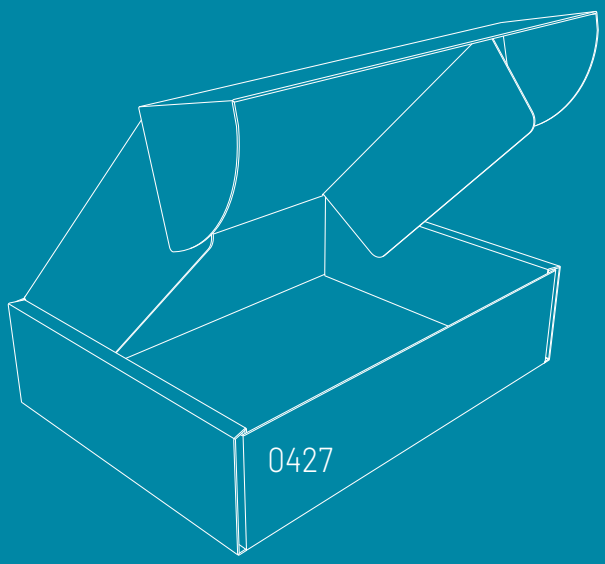

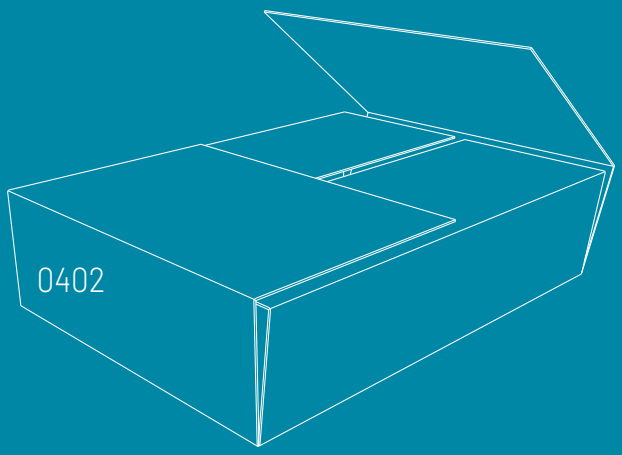

0400 M

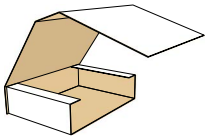

0401 M

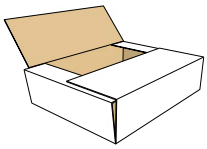

0402 M

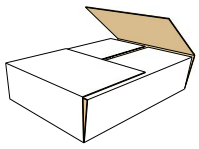

0403 M

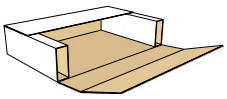

0404 M

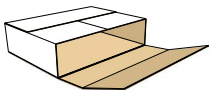

0405 M

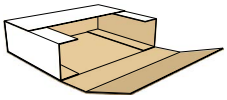

0406 A

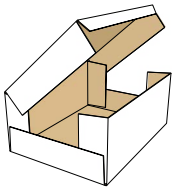

0407 M
NEW

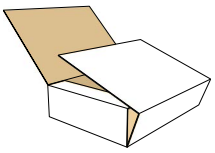

0409 M/A

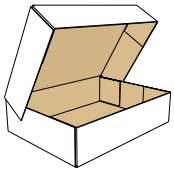

0410 M/A

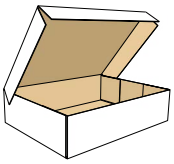

0411 M/A

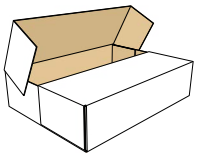

0412 M

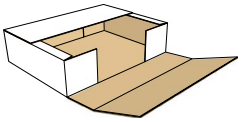

0413 M/A

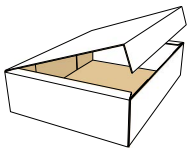

0414 M
NEW

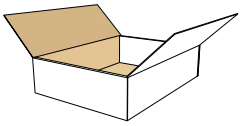

0415 M/A

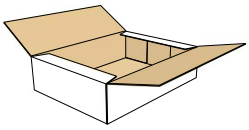

0416 M

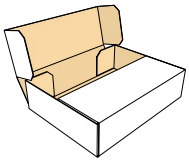

0418 M
NEW

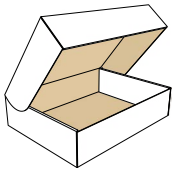

0420 M/A

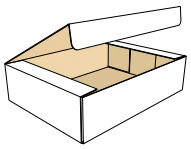

0421 M/A

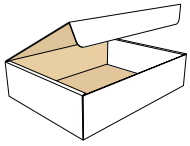

0422 M/A

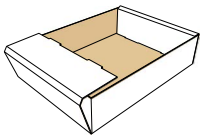

0423 M/A

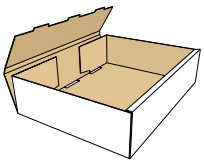

0424 M/A

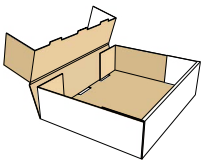

0425 M/A

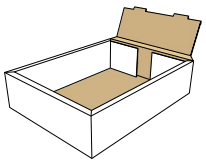

0425.1 M/A
NEW

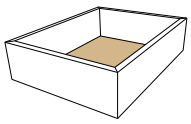

0426 M

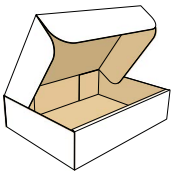

0427 M

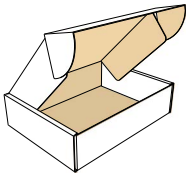

0427.1 M
NEW

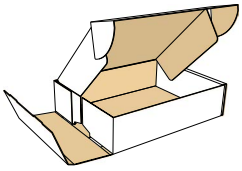

0428 M

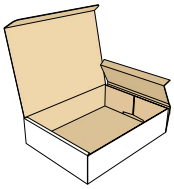

0429 M

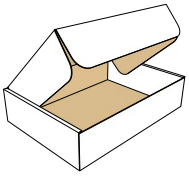

0430 M/A

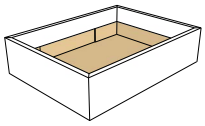

© 2022, 12th Edition - All rights reserved.

0431 M

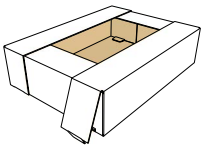

0432 M

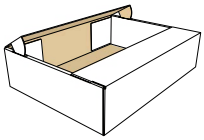

0433 M

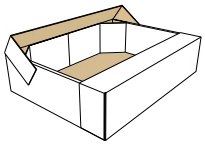

0434 A

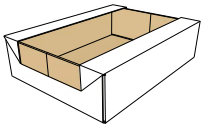

0435 M/A

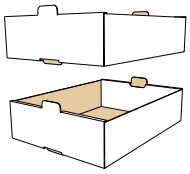

0435.1 M/A
NEW

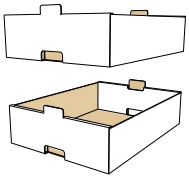

0436 M

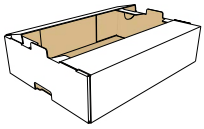

0436.1 A
NEW

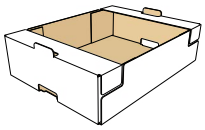

0436.2 A
NEW

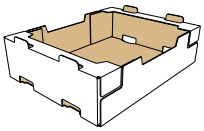

0437 M

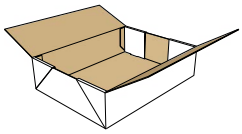

0438 A
NEW

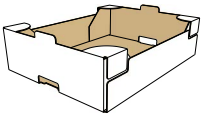

0439 M
NEW

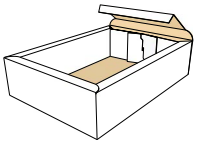

0440 A

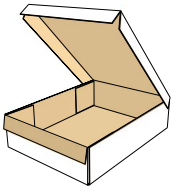

0441 A

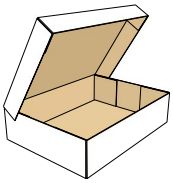

0442 M

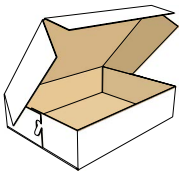

0443 M

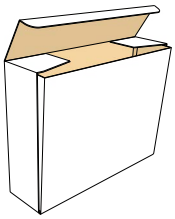

0444 M

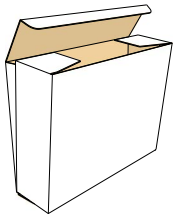

0445 M

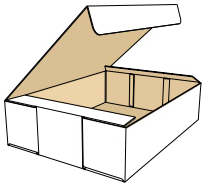

0446 A

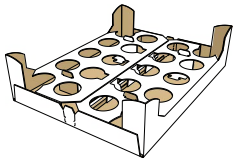

0447 M

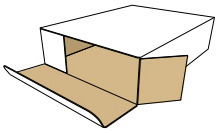

0448 M

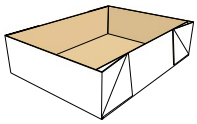

0449 M

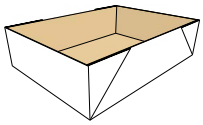

0449.1 M
NEW

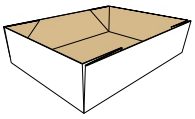

0450 M

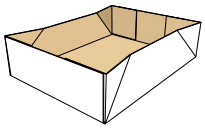

0451 M

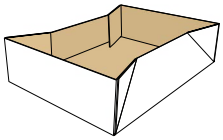

0451.1 M
NEW

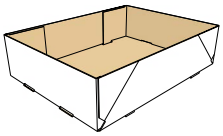

0452 A

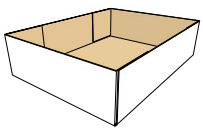

0453 A

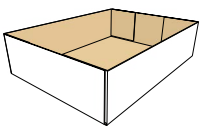

0454 M

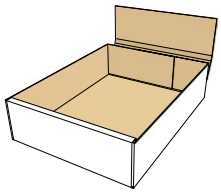

0455 M

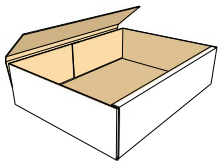

© 2022, 12th Edition - All rights reserved.

0456 M

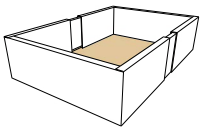

0457 M

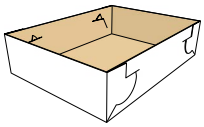

0458 M

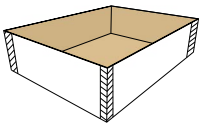

0459 A

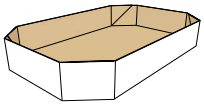

0459.1 A
NEW

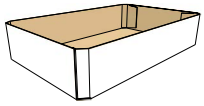

0460 A

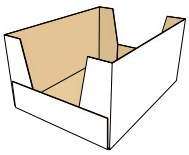

0461 M/A
NEW

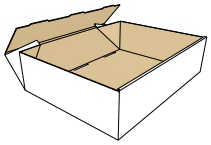

0462 M
NEW

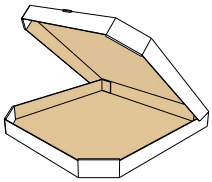

0463 M
NEW

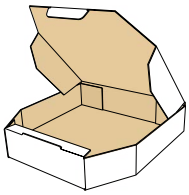

0464 M
NEW

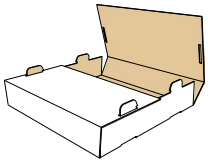

0465 M
NEW

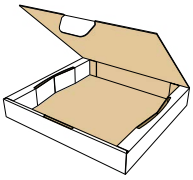

0466 M
NEW

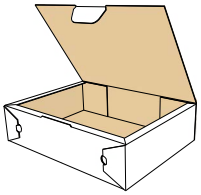

0469 M
NEW

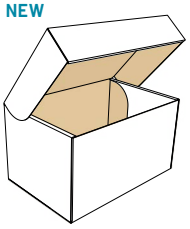

0470 M

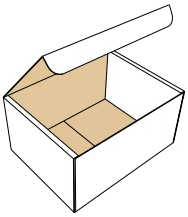

0471 M

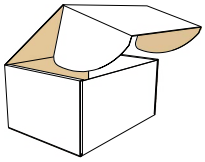

0472 M

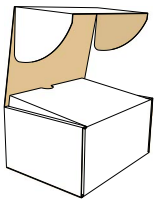

0473 M

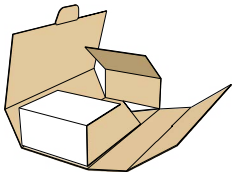

0474 M
NEW

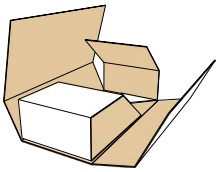

0475 M
NEW

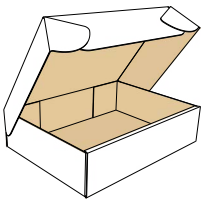

0476 M
NEW

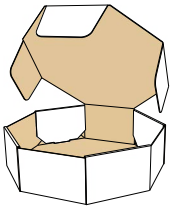

0480 A

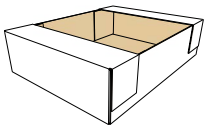

0481 M
NEW

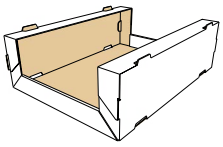

0482 M
NEW

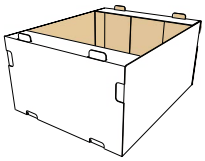

0483 A
NEW

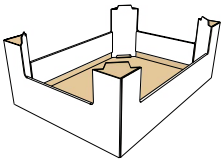

0484 M
NEW

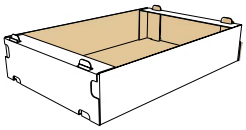

0485 M
NEW

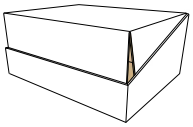

© 2022, 12th Edition - All rights reserved.

0400 M

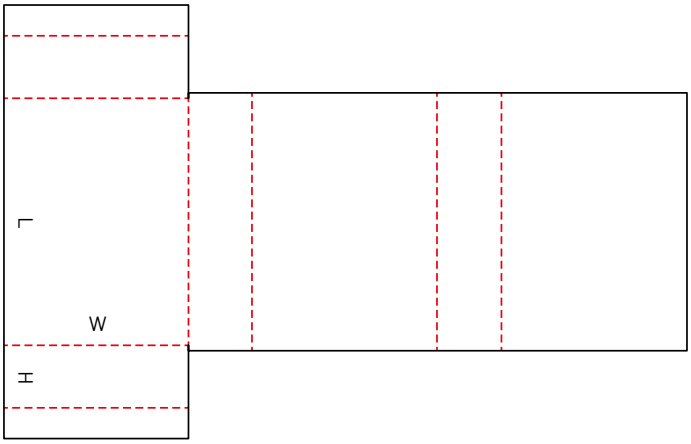

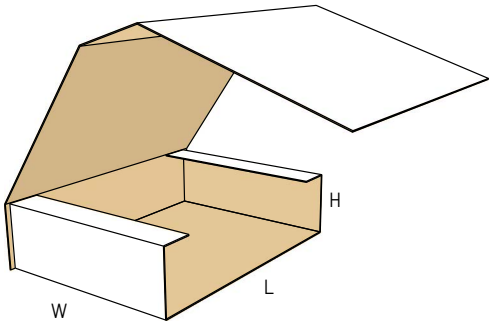

0401 M

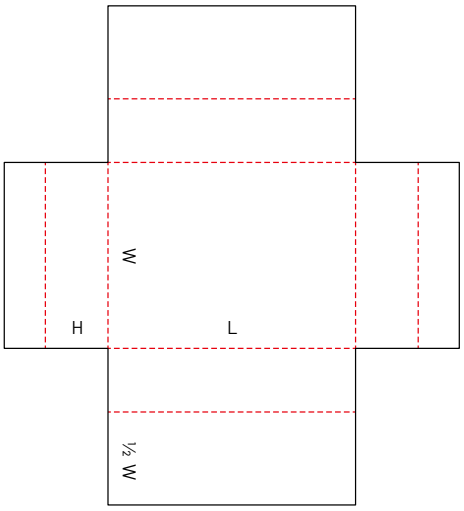

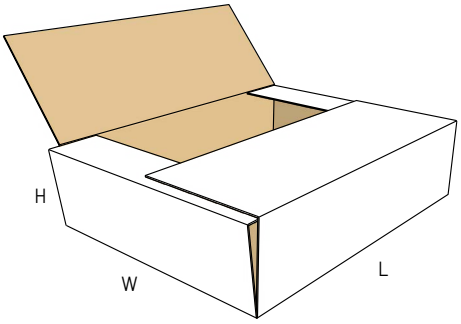

0402 M

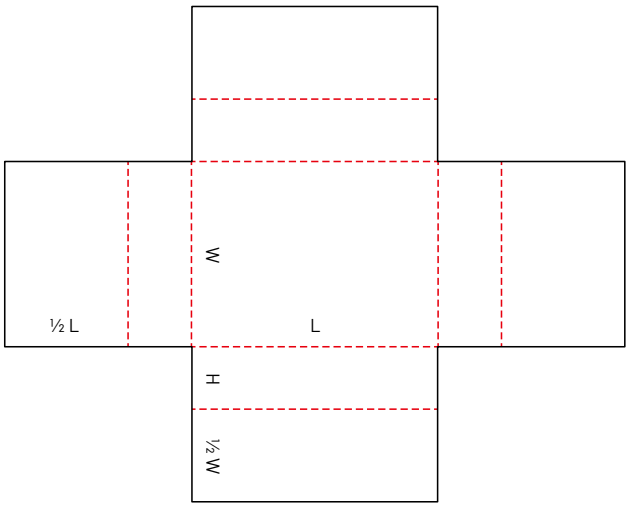

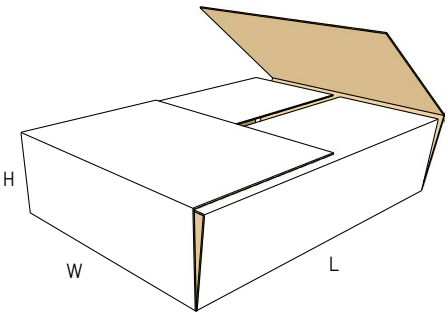

© 2022, 12th Edition - All rights reserved.

0403 M

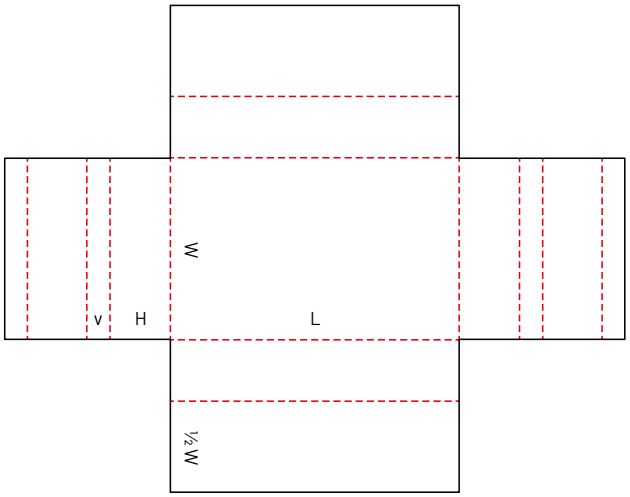

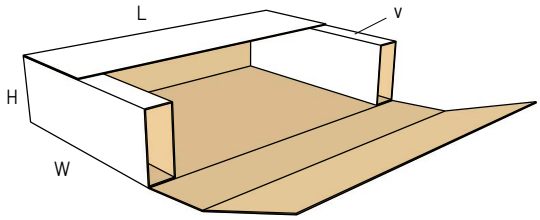

0404 M

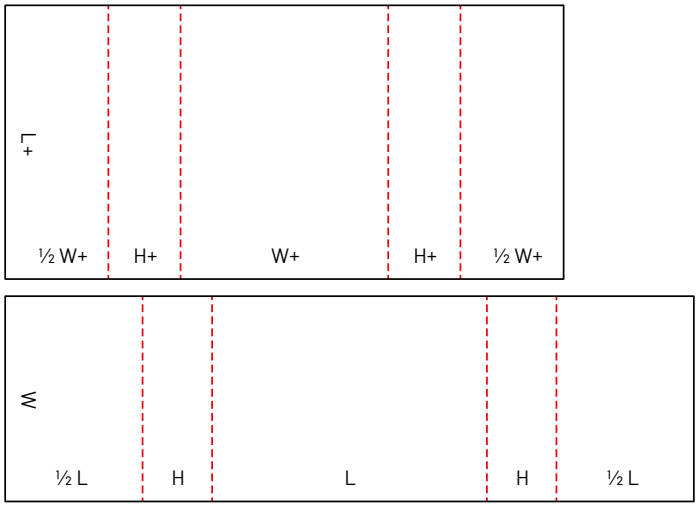

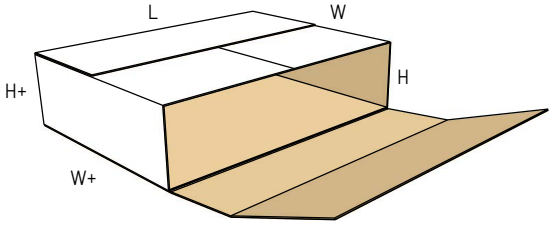

0405 M

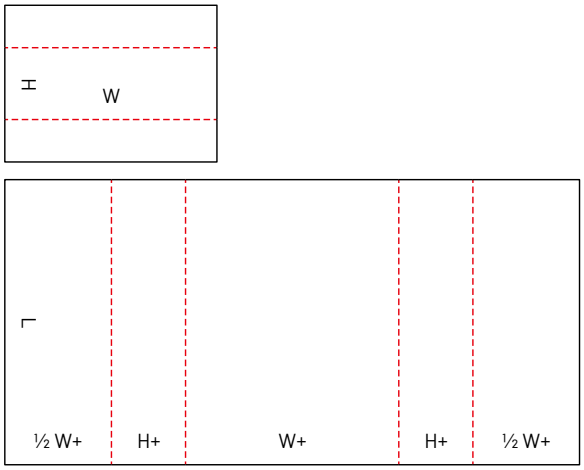

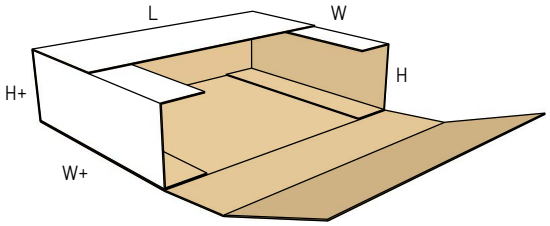

© 2022, 12th Edition - All rights reserved.

0406 A

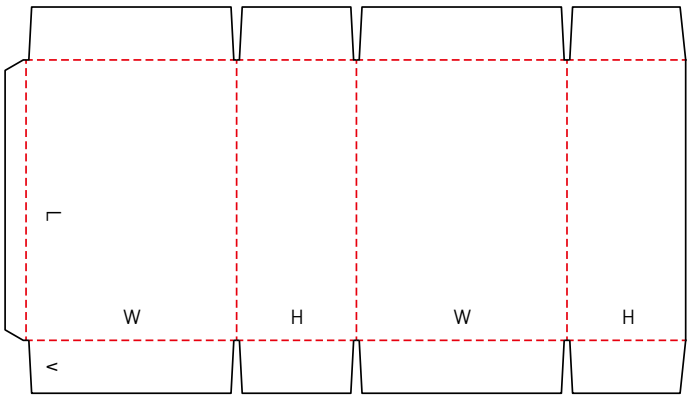

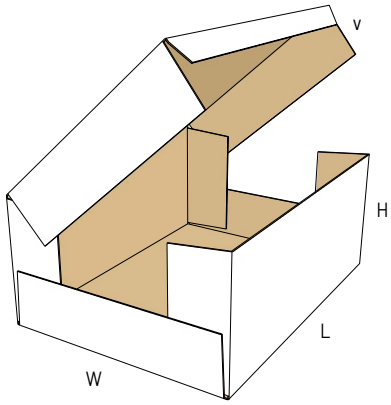

0407 M

NEW

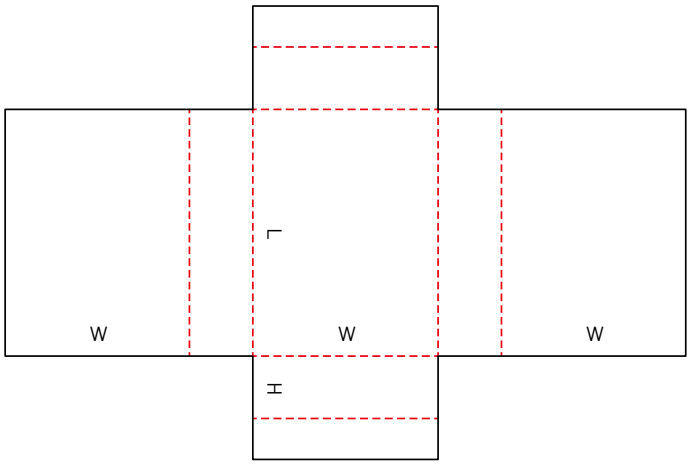

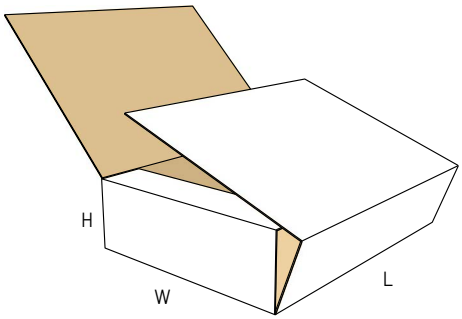

0409 M/A

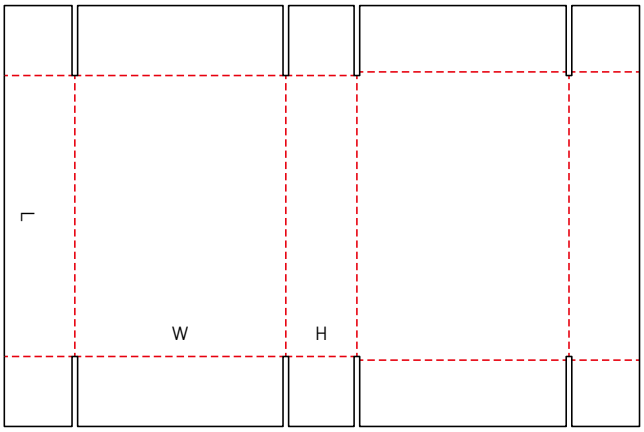

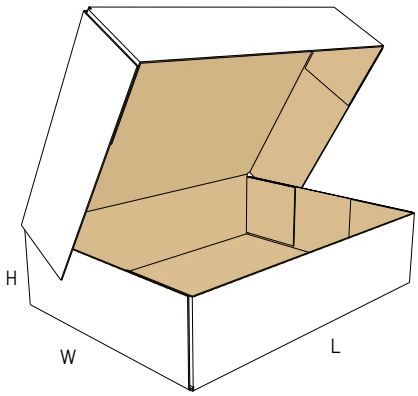

© 2022, 12th Edition - All rights reserved.

0410 M/A

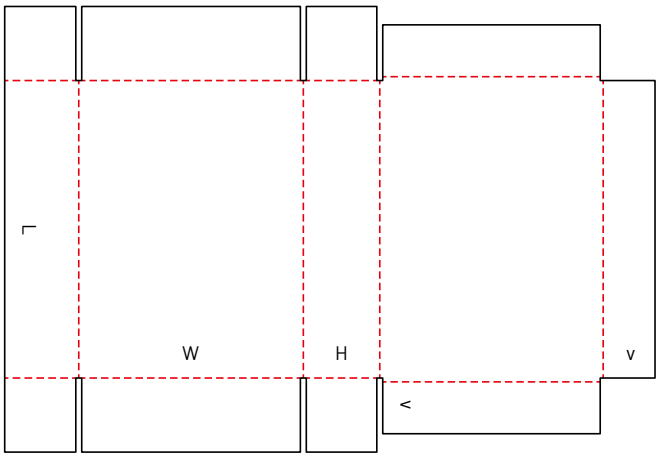

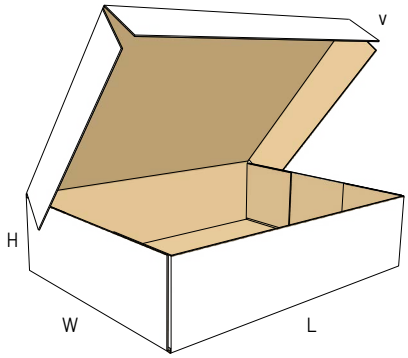

0411 M/A

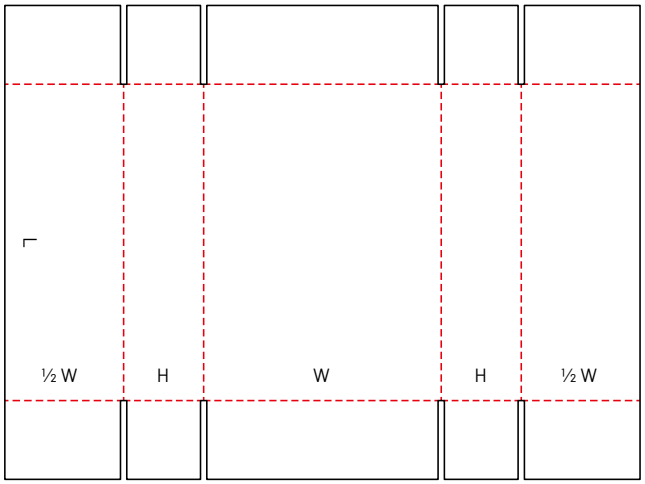

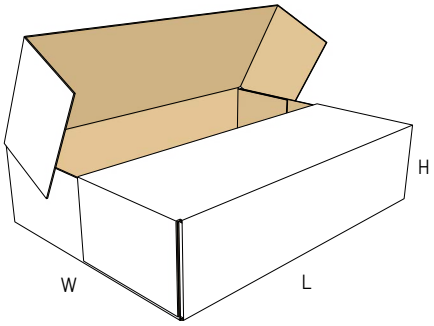

0412 M

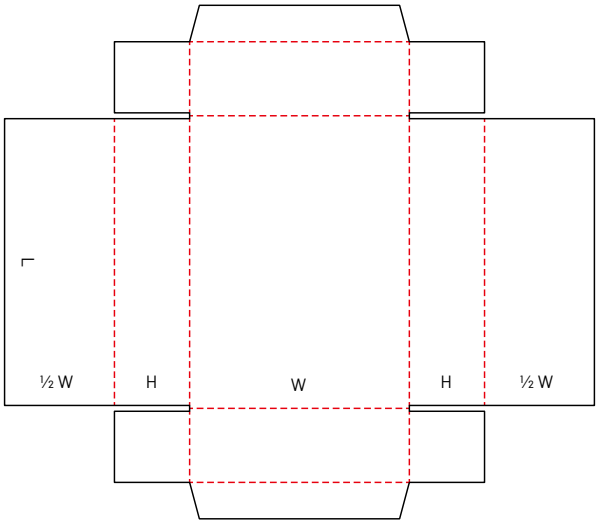

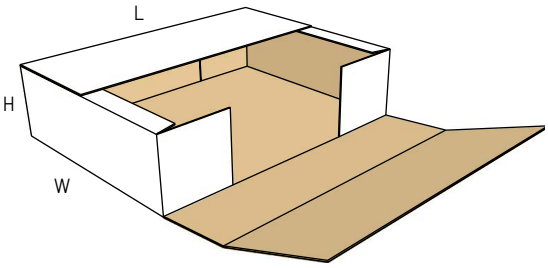

© 2022, 12th Edition - All rights reserved.

0413 M/A

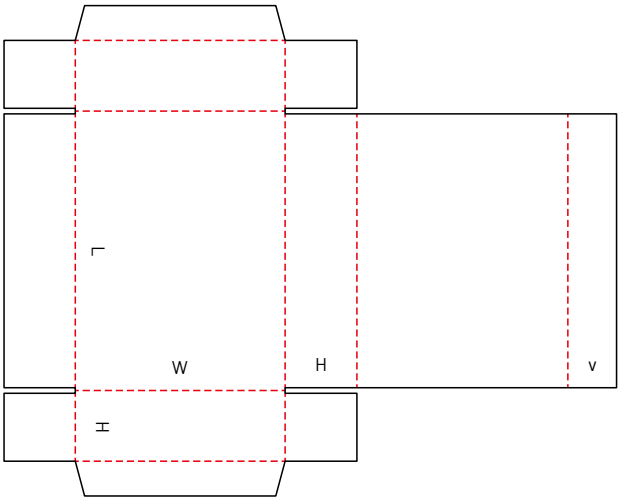

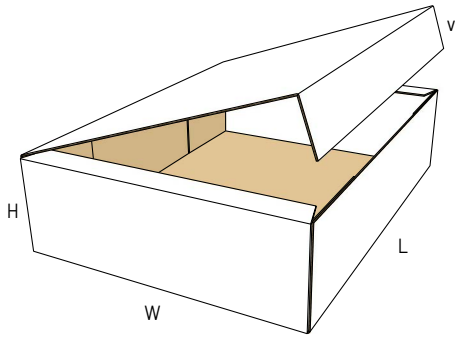

0414 M

NEW

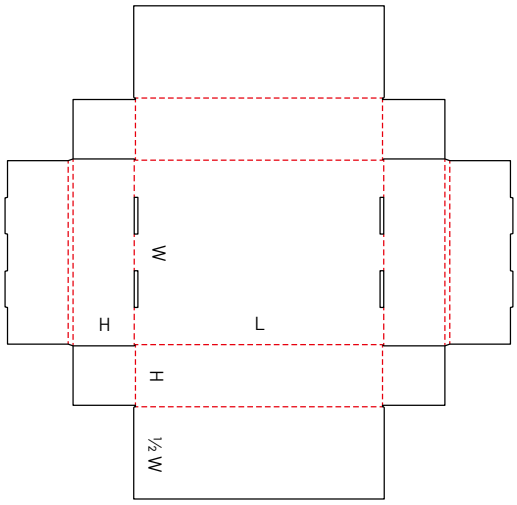

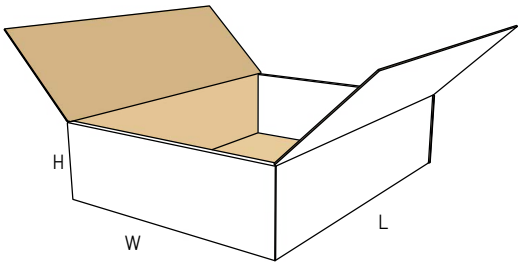

0415 M/A

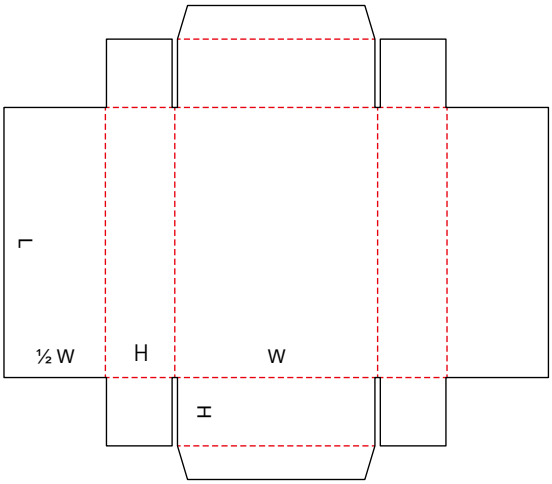

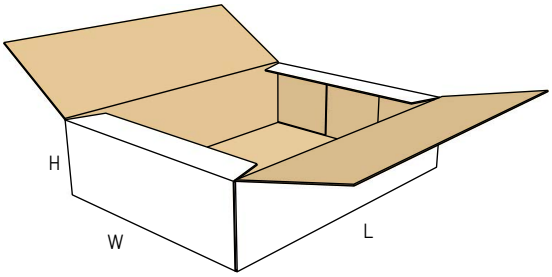

© 2022, 12th Edition - All rights reserved.

0416 M

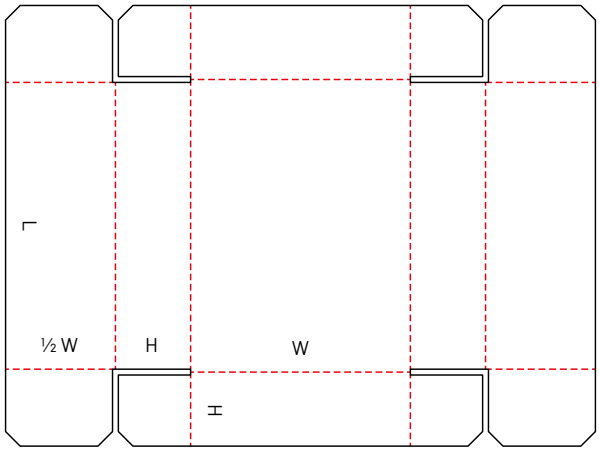

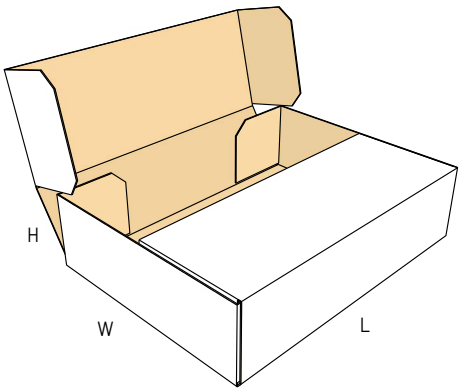

0418 M

NEW

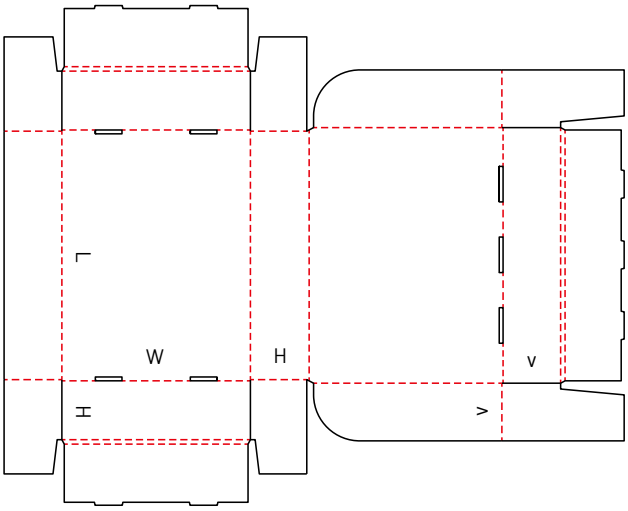

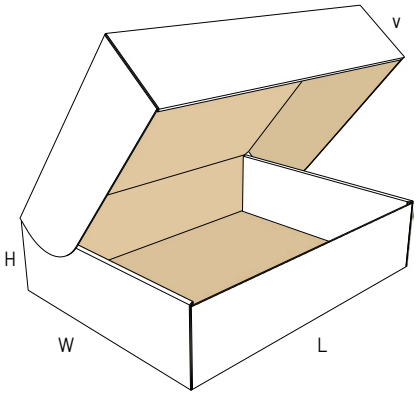

0420 M/A

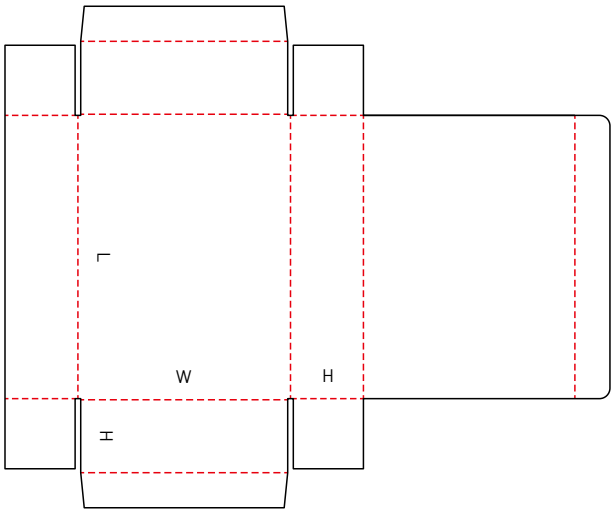

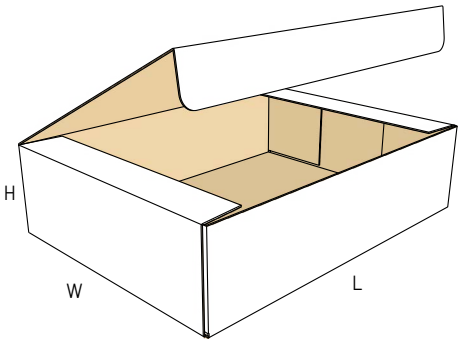

© 2022, 12th Edition - All rights reserved.

0421 M/A

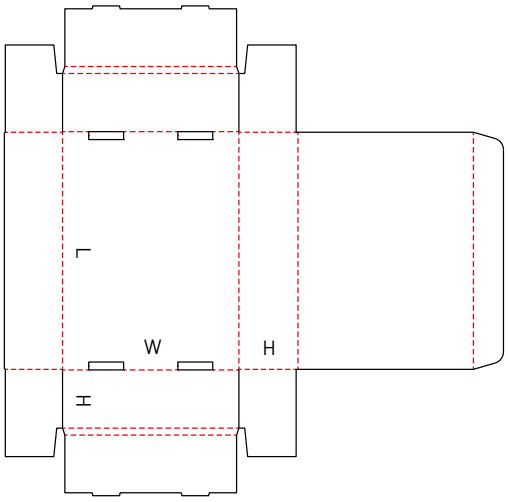

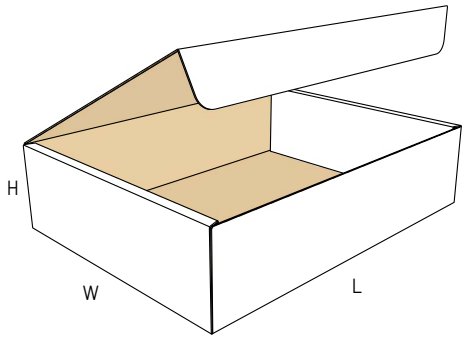

0422 M/A

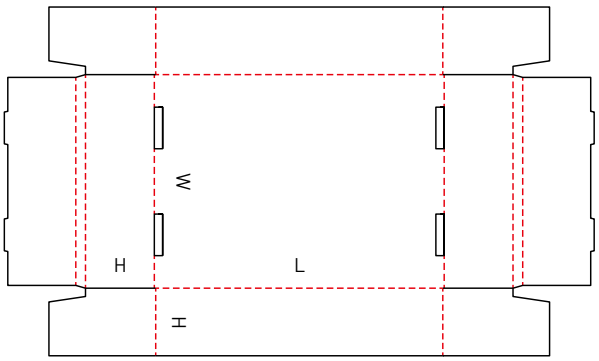

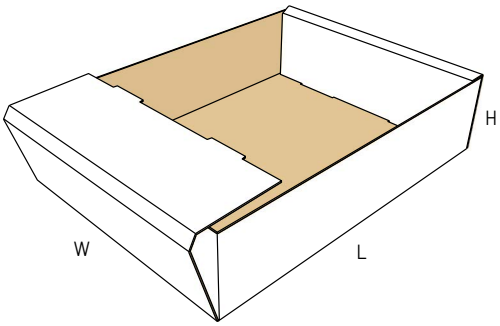

0423 M/A

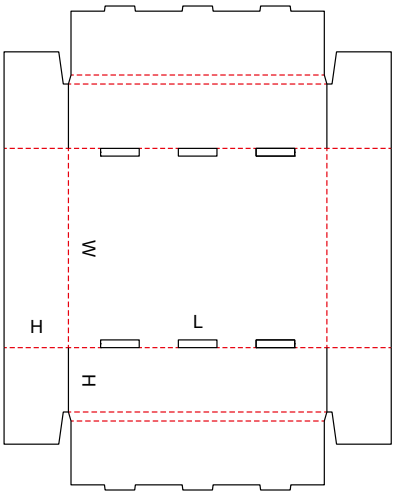

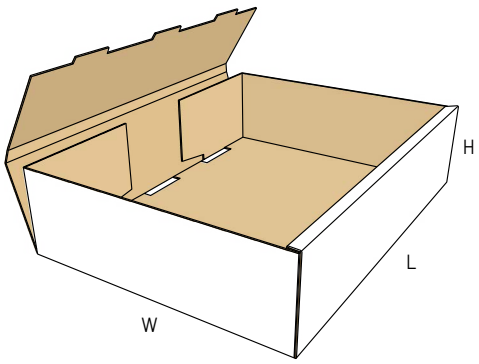

© 2022, 12th Edition - All rights reserved.

0424 M/A

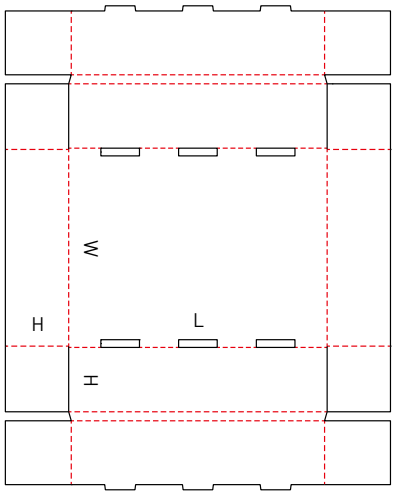

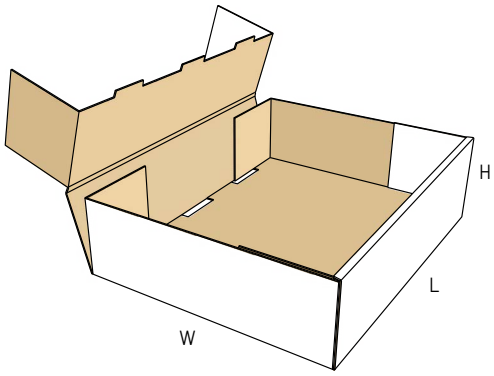

0425 M/A

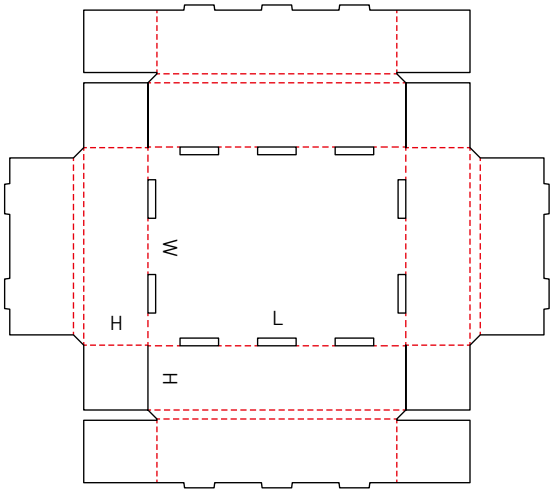

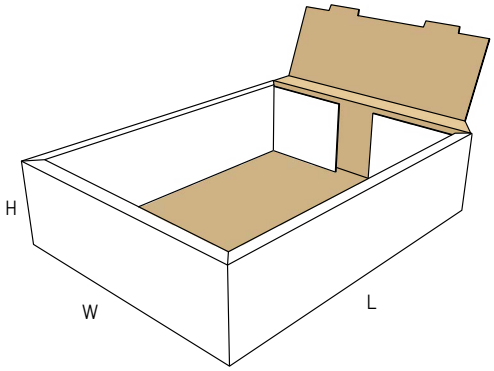

0425.1 M/A

NEW

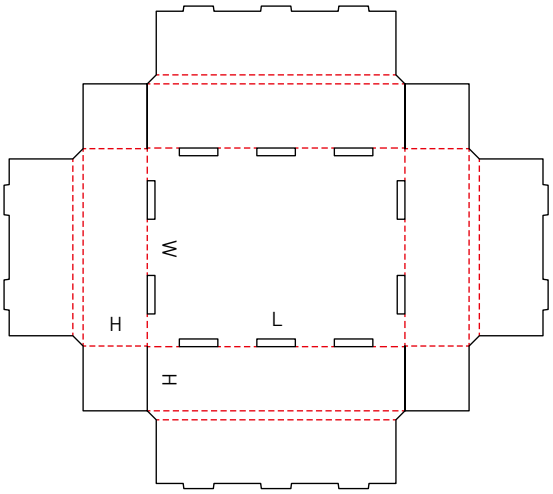

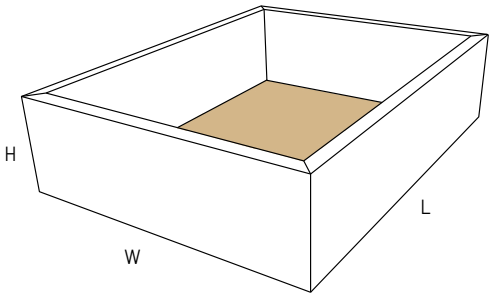

© 2022, 12th Edition - All rights reserved.

0426 M

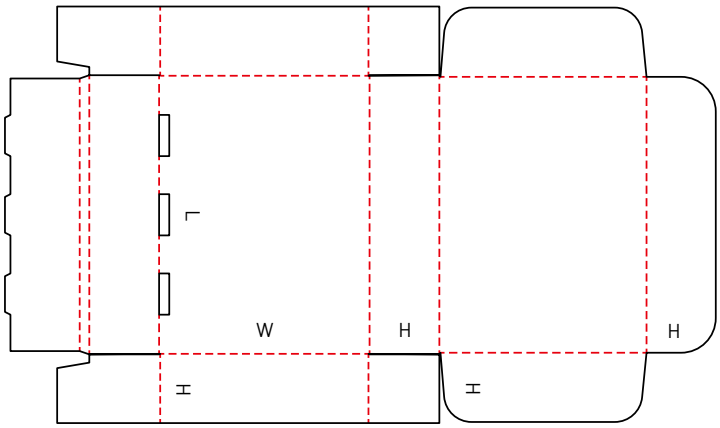

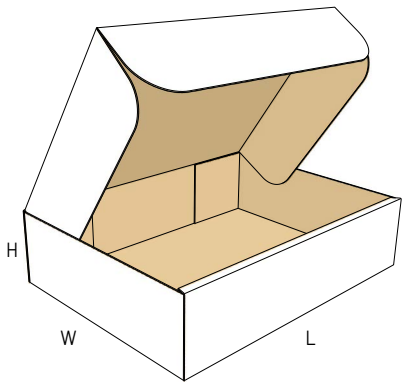

0427 M

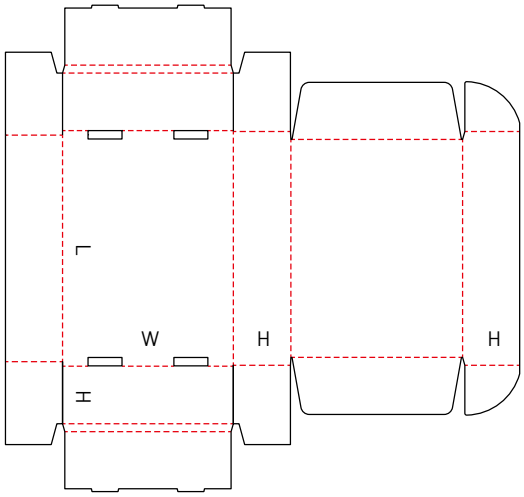

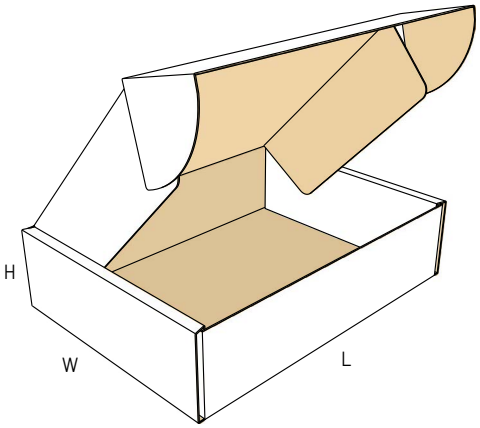

0427.1 M

NEW

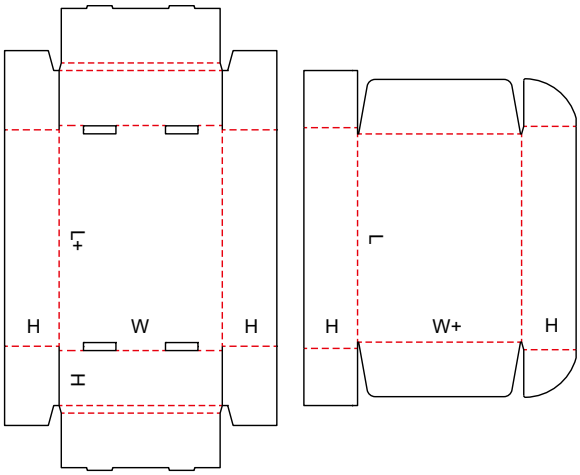

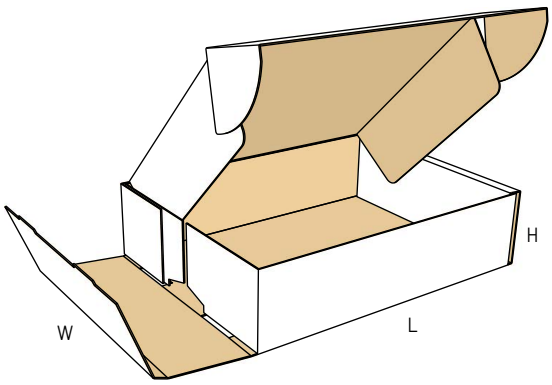

© 2022, 12th Edition - All rights reserved.

0428 M

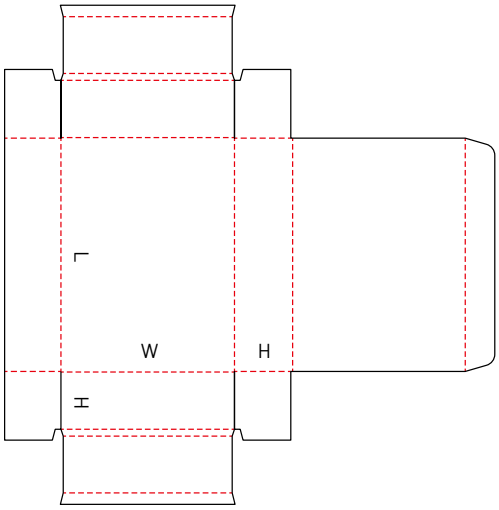

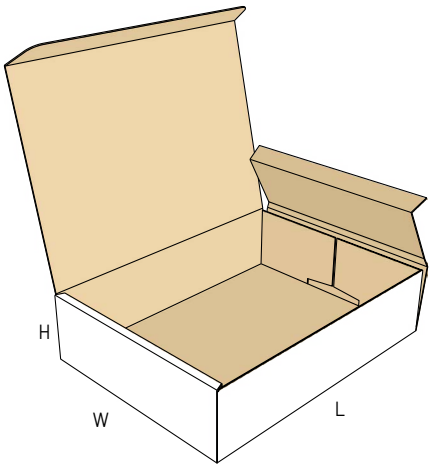

0429 M

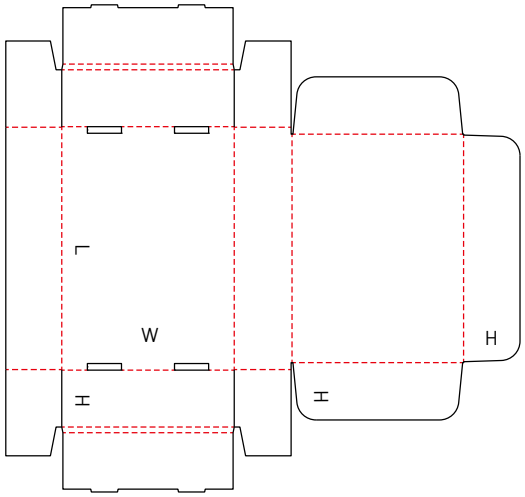

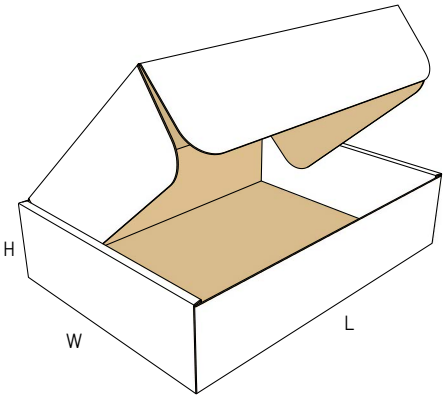

0430 M/A

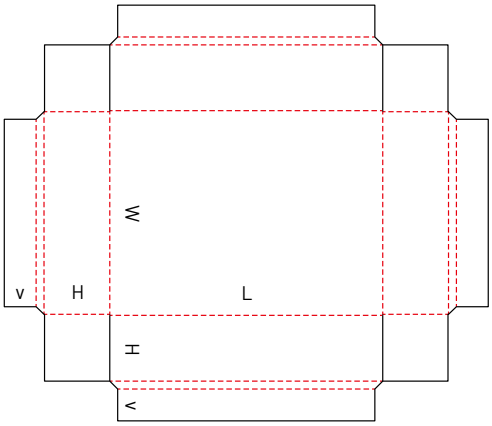

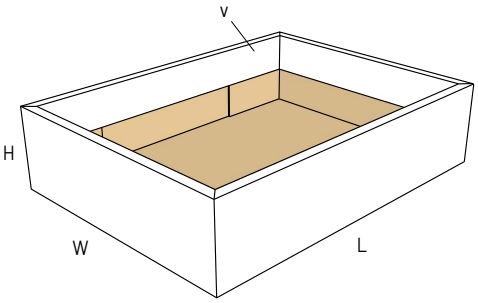

© 2022, 12th Edition - All rights reserved.

0431 M

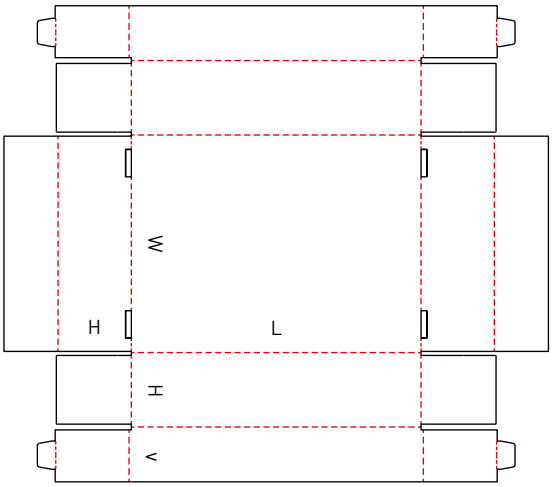

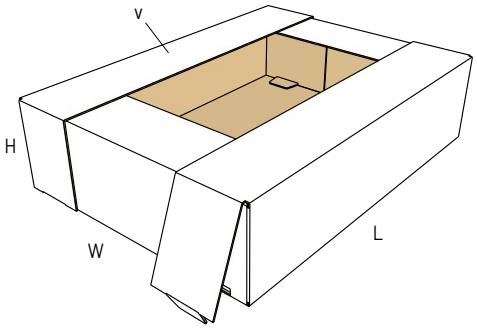

0432 M

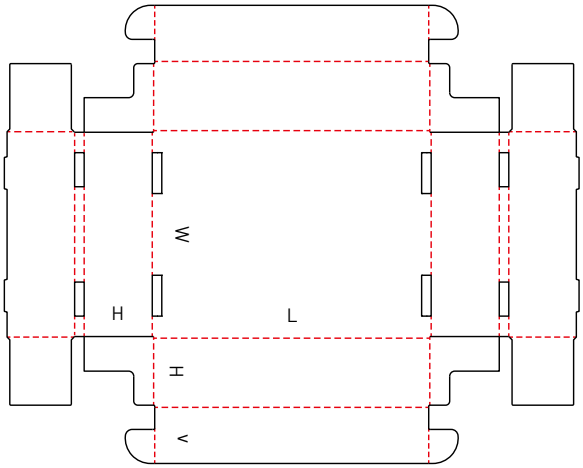

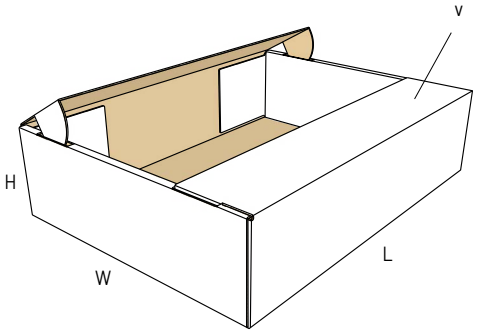

0433 M

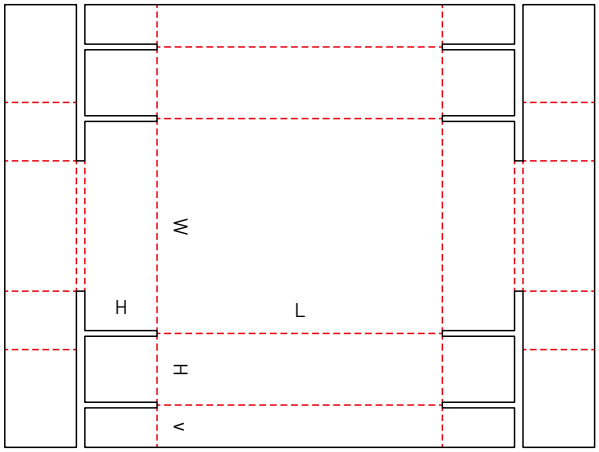

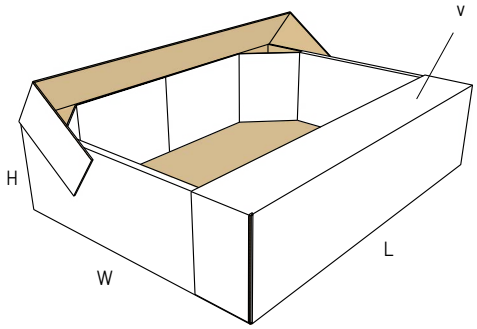

© 2022, 12th Edition - All rights reserved.

0434 A

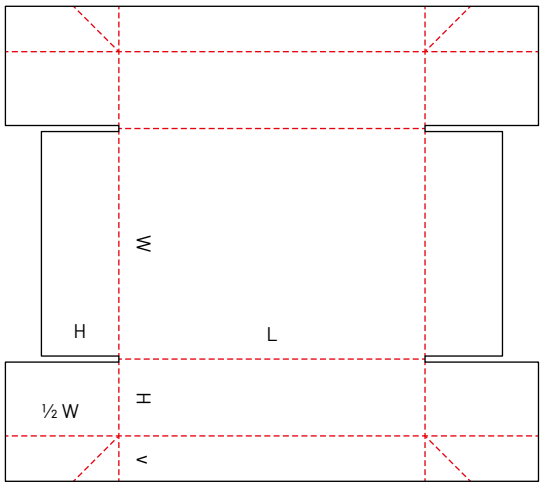

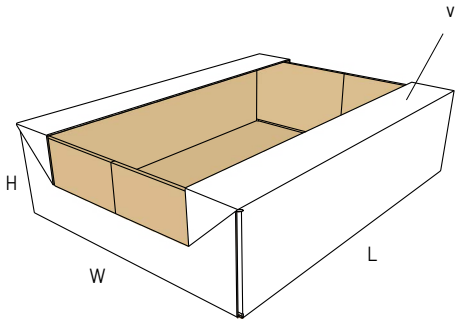

0435 M/A

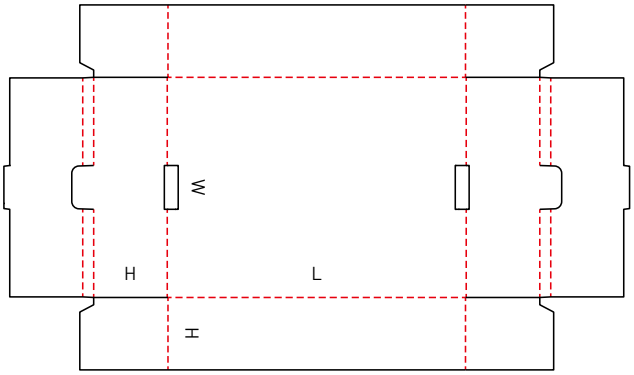

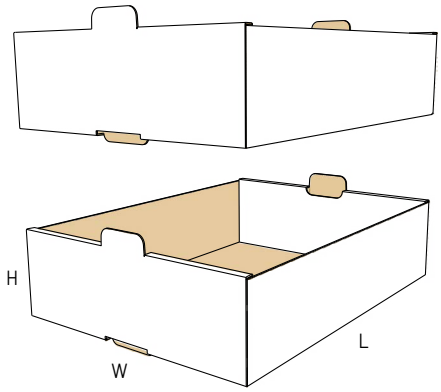

0435.1 M/A

NEW

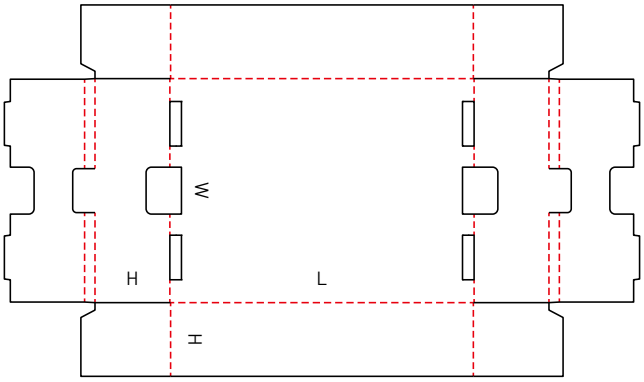

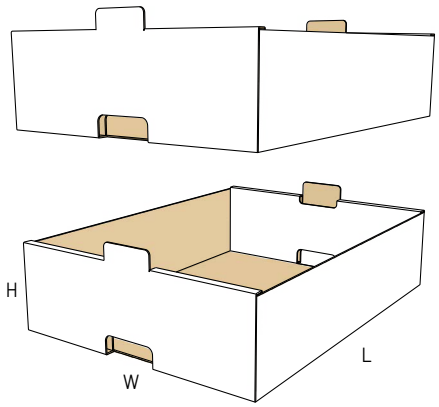

© 2022, 12th Edition - All rights reserved.

0436 M

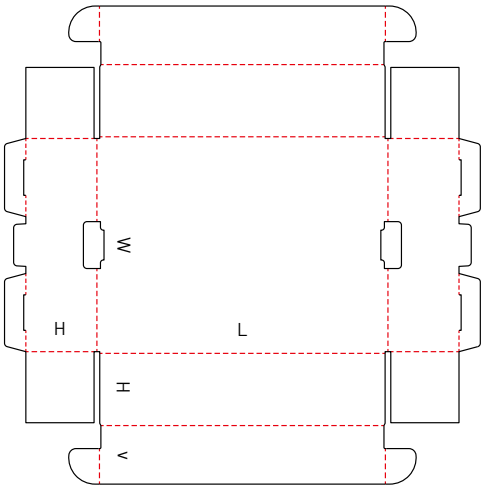

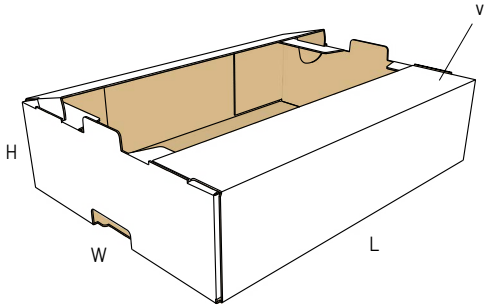

Tabs and slots should conform with the FEFCO Common Footprint Quality (CFQ) Standard. The CFQ requirements and the stamp can be downloaded from FEFCO website.

0436.1 A

NEW

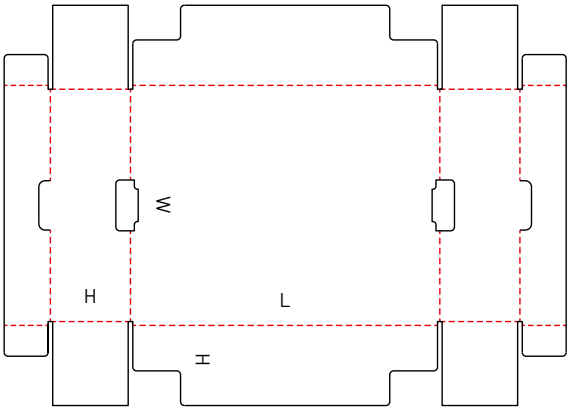

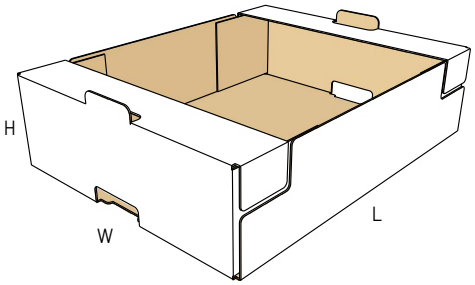

Tabs and slots should conform with the FEFCO Common Footprint Quality (CFQ) Standard. The CFQ requirements and the stamp can be downloaded from FEFCO website.

0436.2 A

NEW

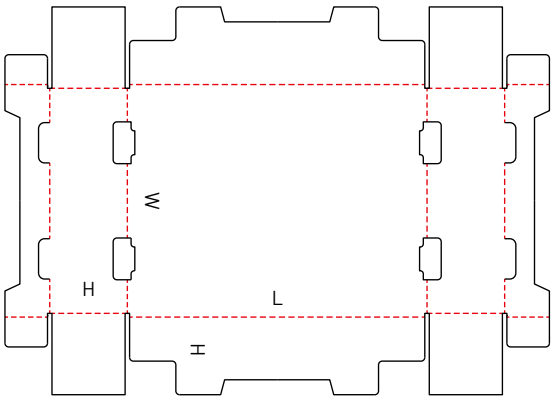

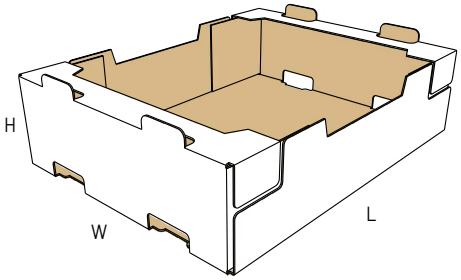

© 2022, 12th Edition - All rights reserved.

0437 M

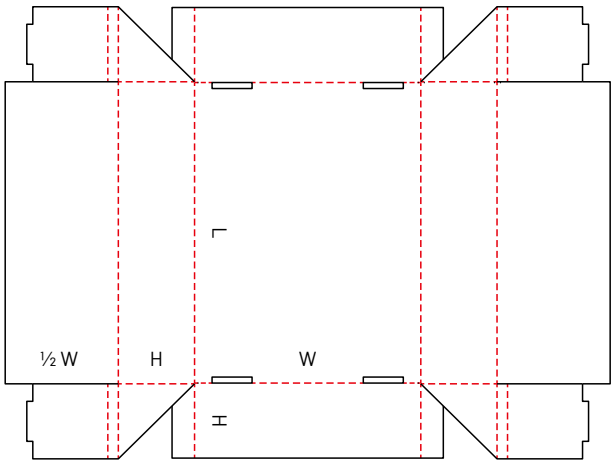

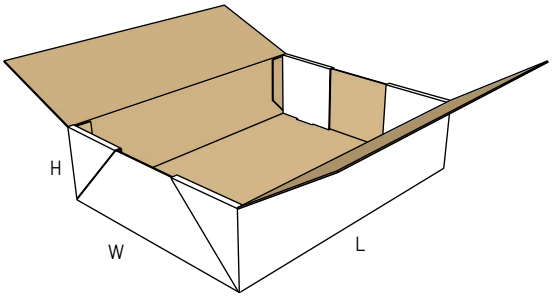

0438 A

NEW

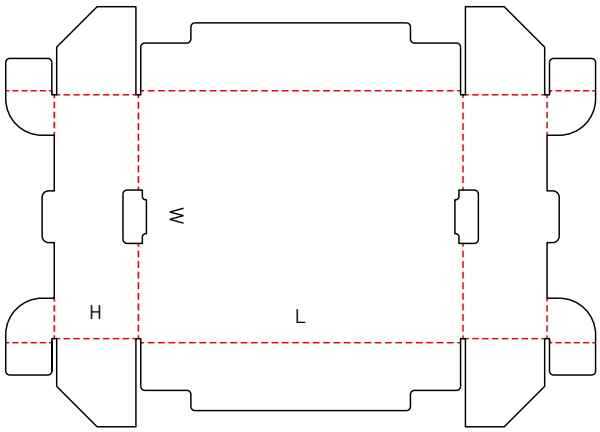

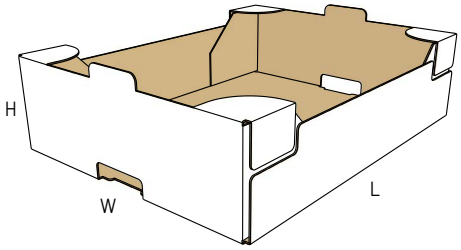

0439 M

NEW

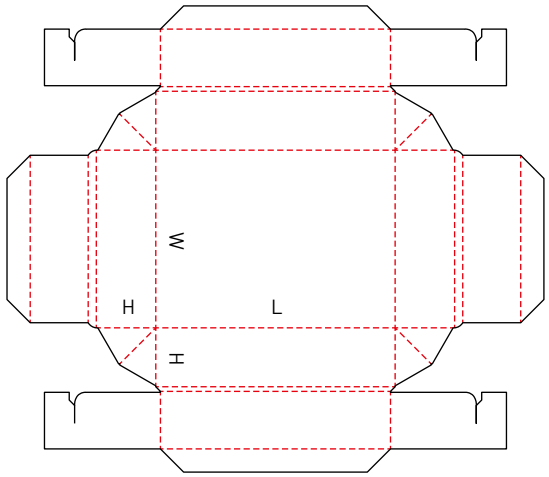

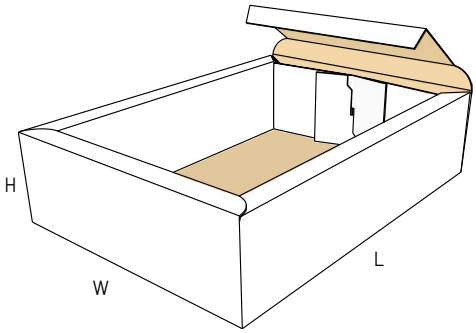

© 2022, 12th Edition - All rights reserved.

0440 A

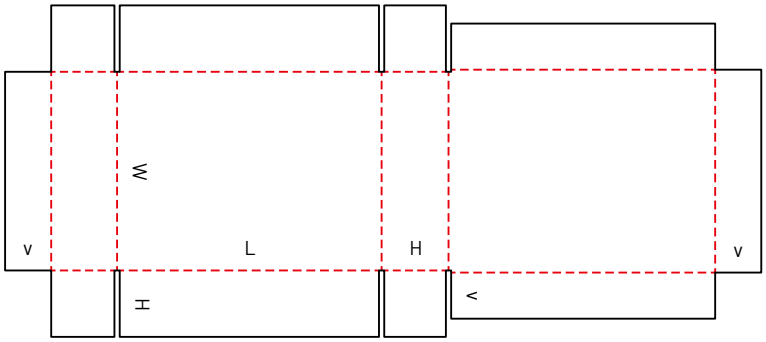

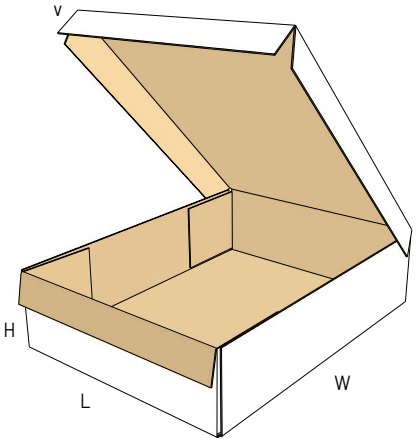

0441 A

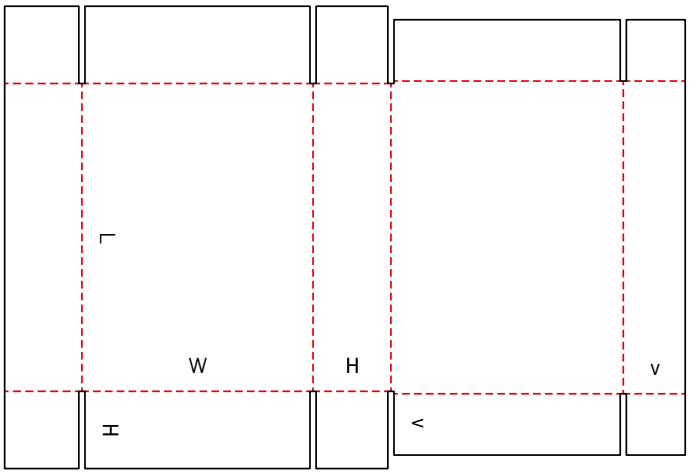

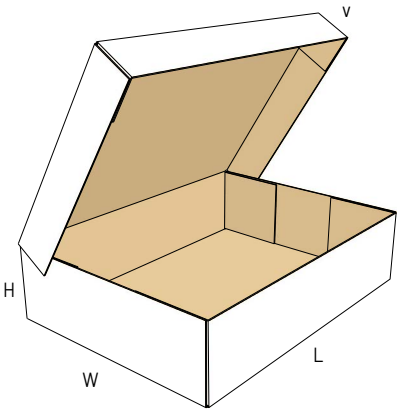

0442 M

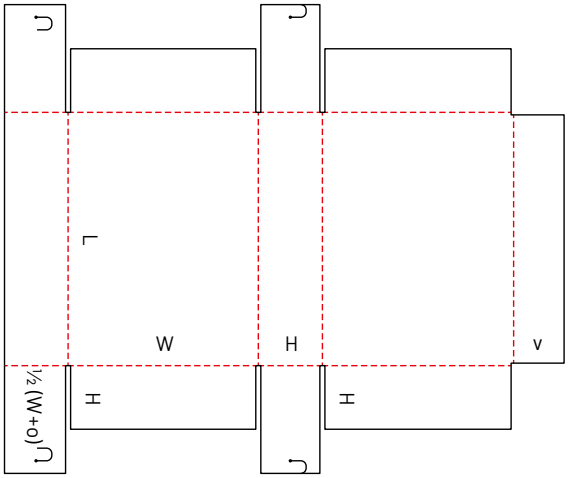

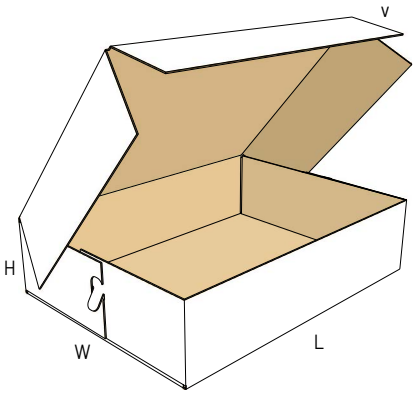

© 2022, 12th Edition - All rights reserved.

0443 M

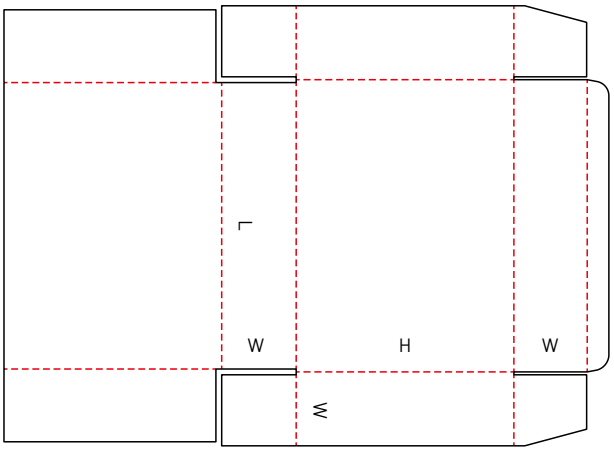

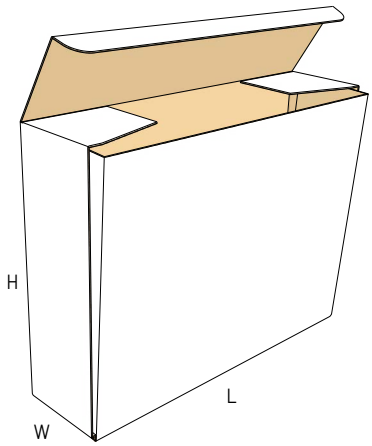

0444 M

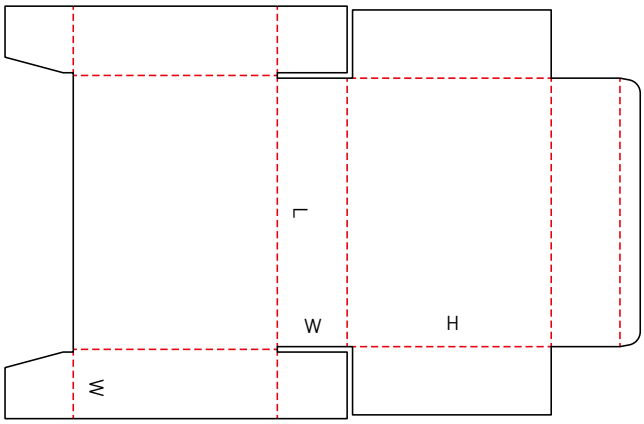

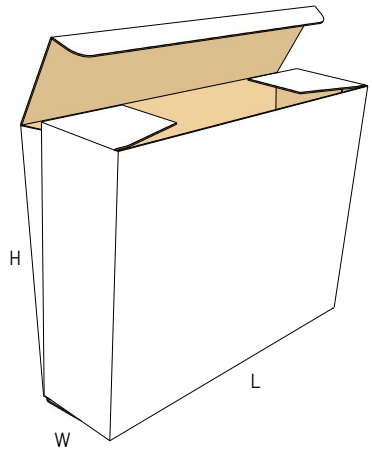

0445 M

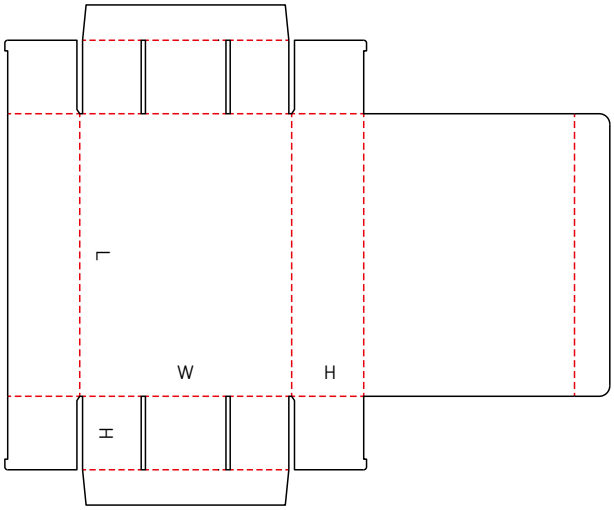

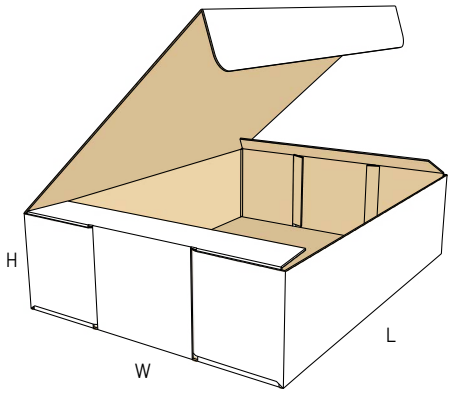

© 2022, 12th Edition - All rights reserved.

0446 A

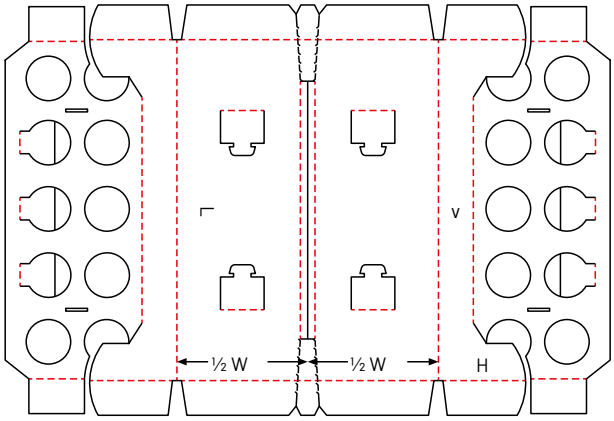

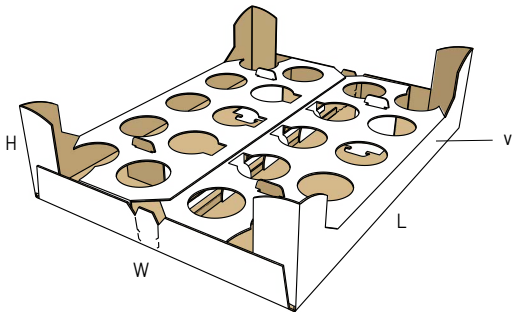

0447 M

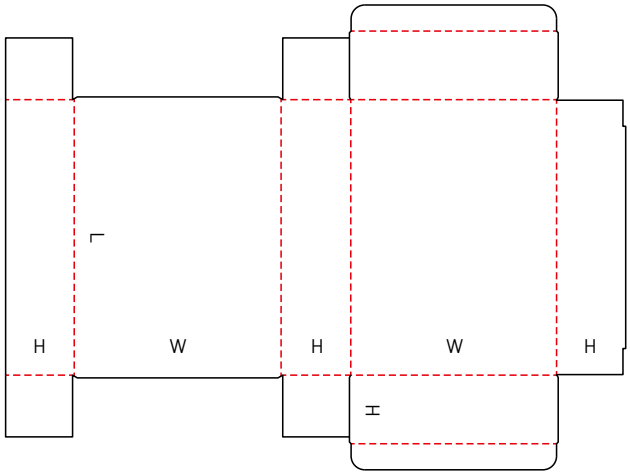

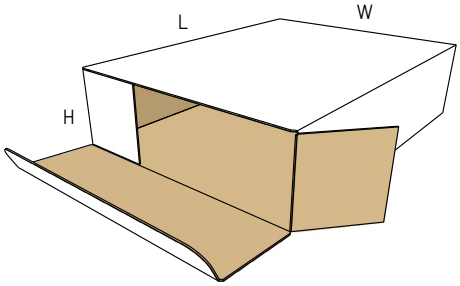

0448 M

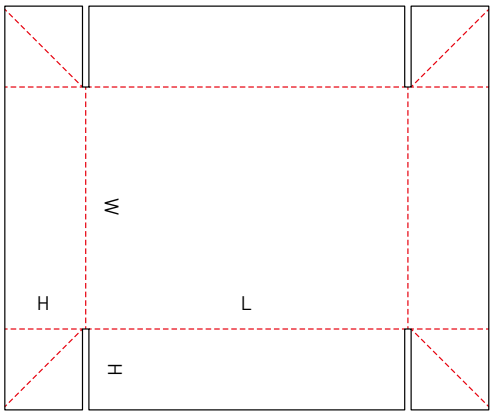

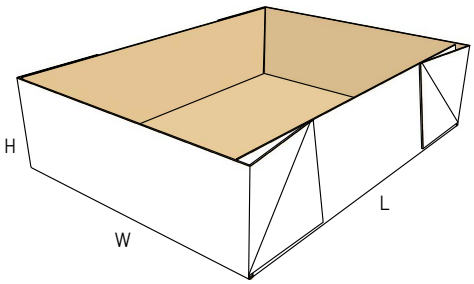

© 2022, 12th Edition - All rights reserved.

0449 M

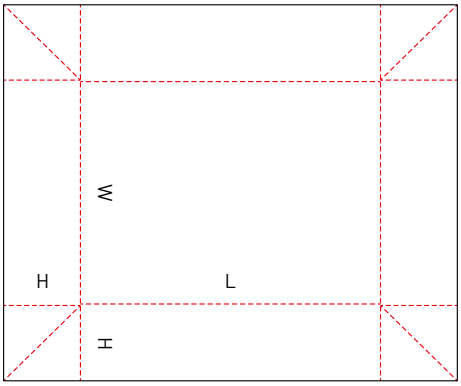

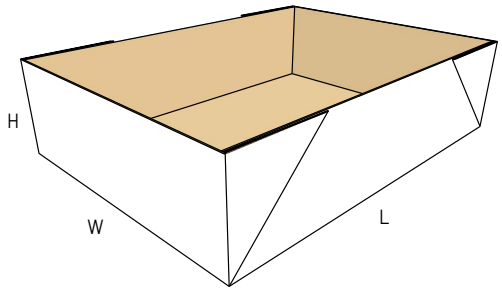

0449.1 M

NEW

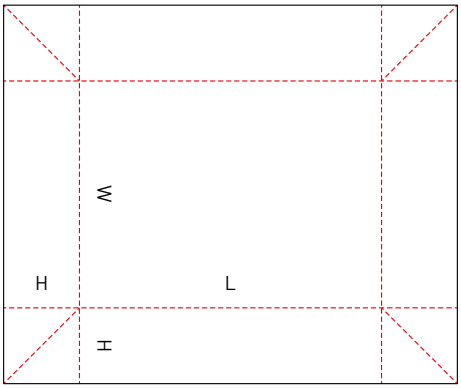

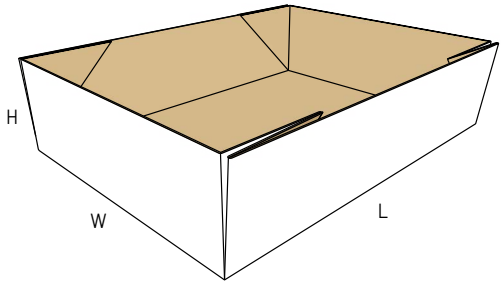

0450 M

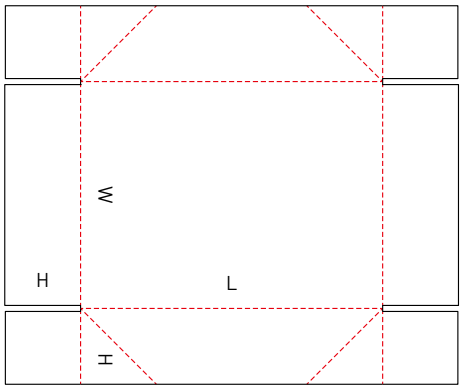

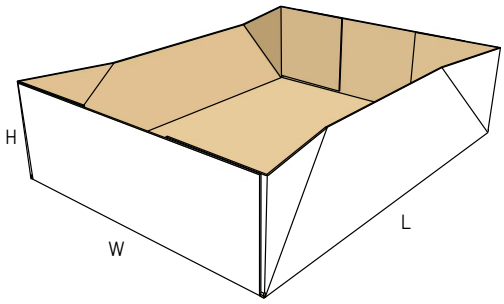

© 2022, 12th Edition - All rights reserved.

0451 M

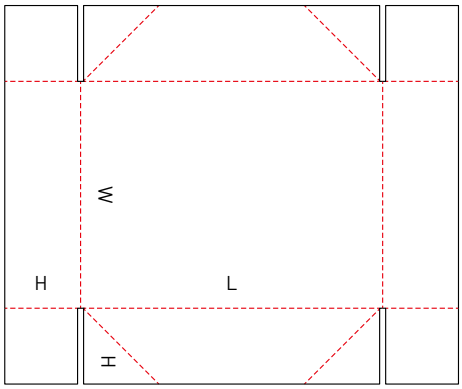

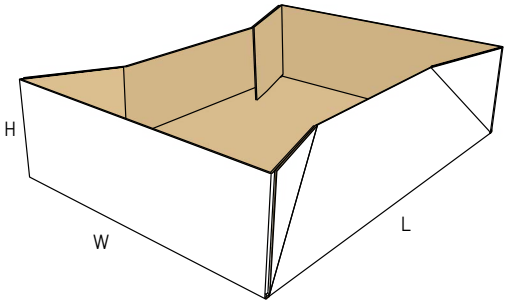

0451.1 M

NEW

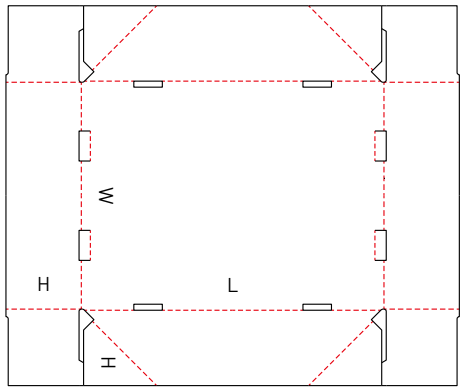

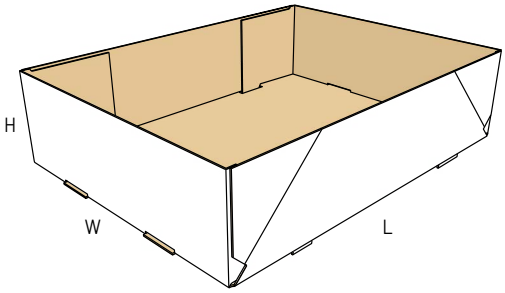

0452 A

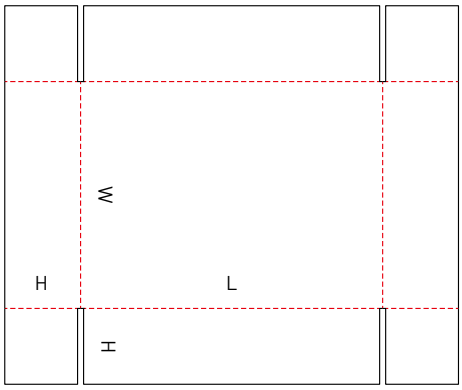

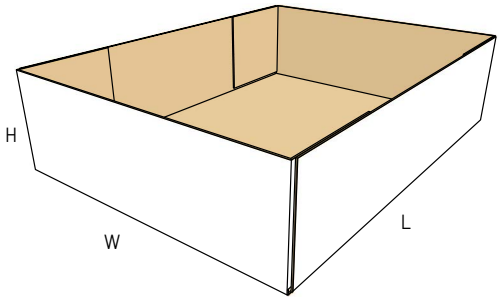

© 2022, 12th Edition - All rights reserved.

0453 A

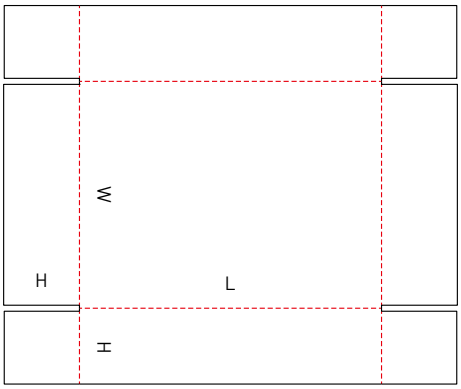

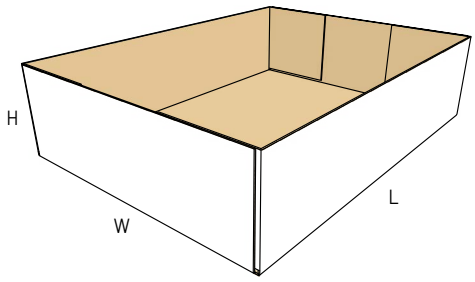

0454 M

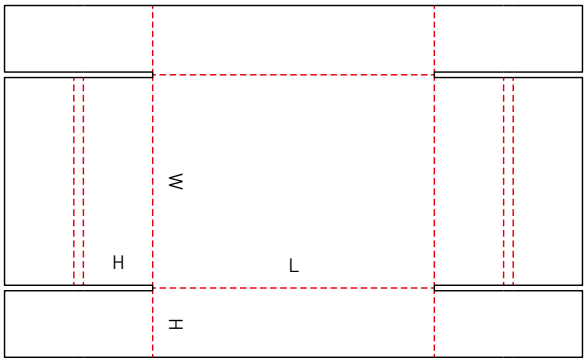

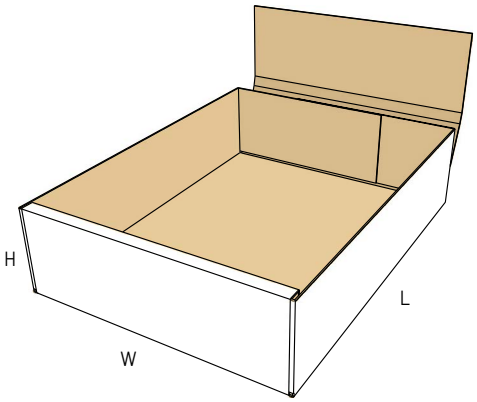

0455 M

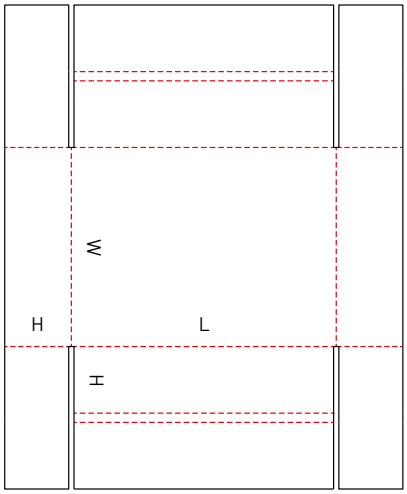

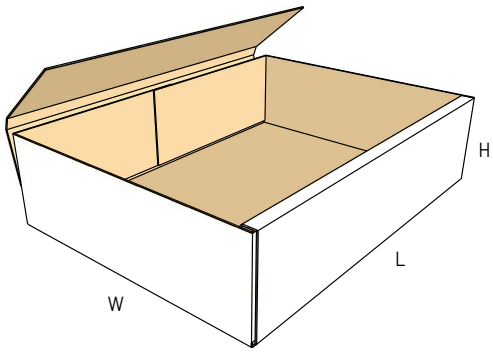

© 2022, 12th Edition - All rights reserved.

0456 M

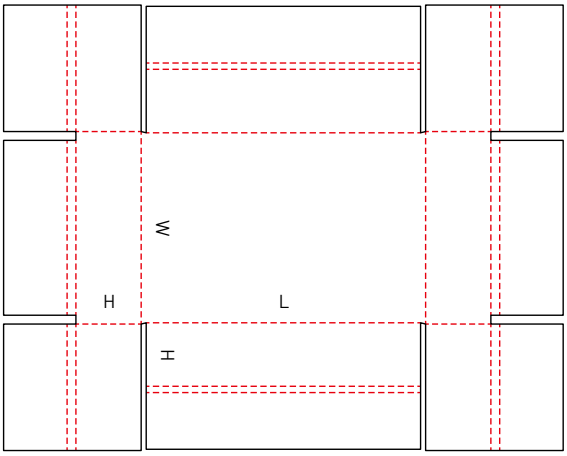

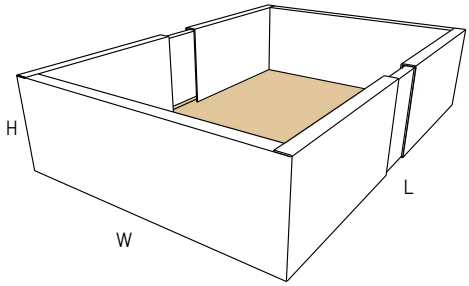

0457 M

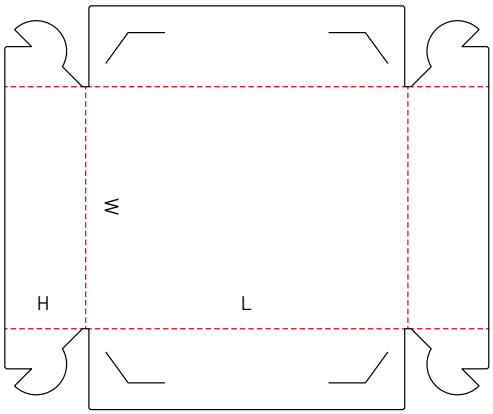

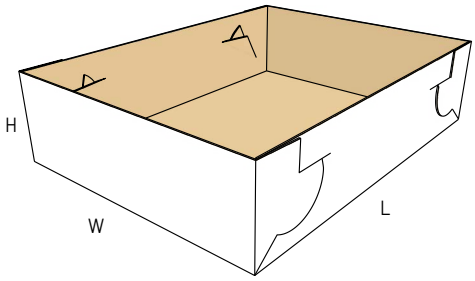

0458 M

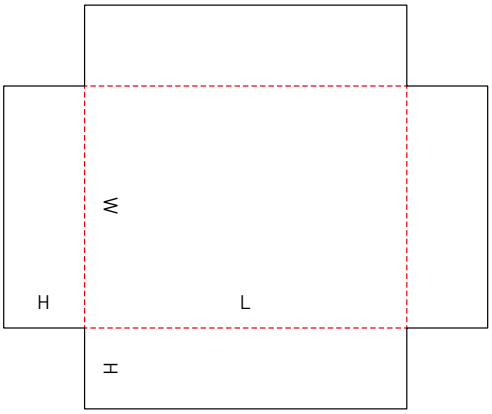

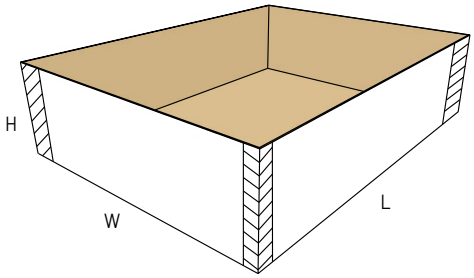

© 2022, 12th Edition - All rights reserved.

0459 A

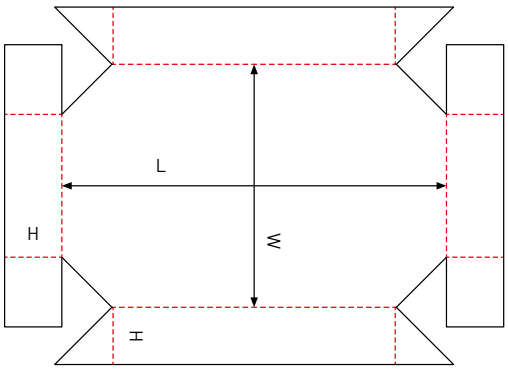

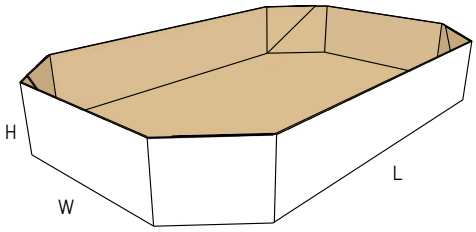

0459.1 A

NEW

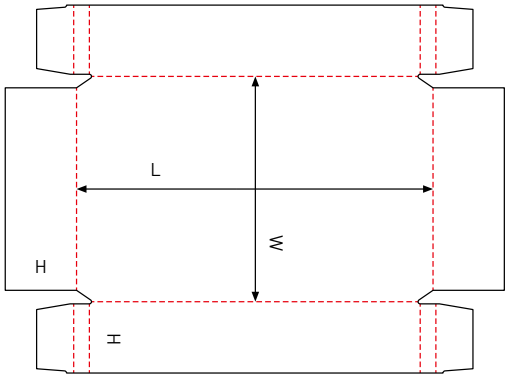

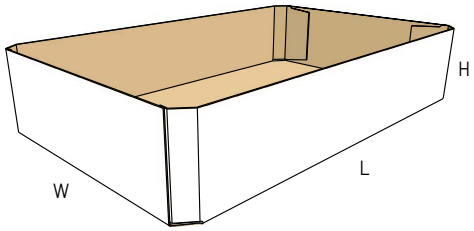

0460 A

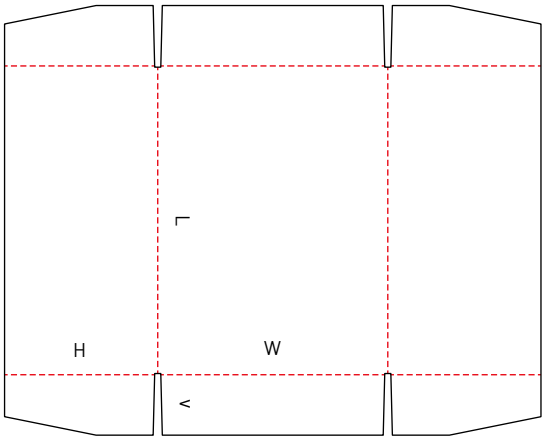

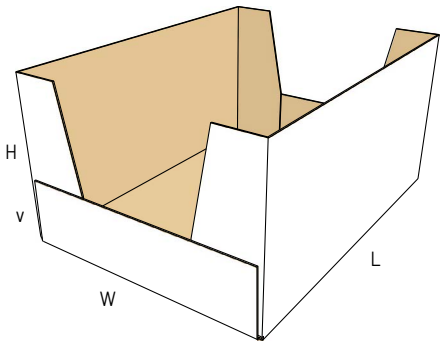

© 2022, 12th Edition - All rights reserved.

0461 M/A

NEW

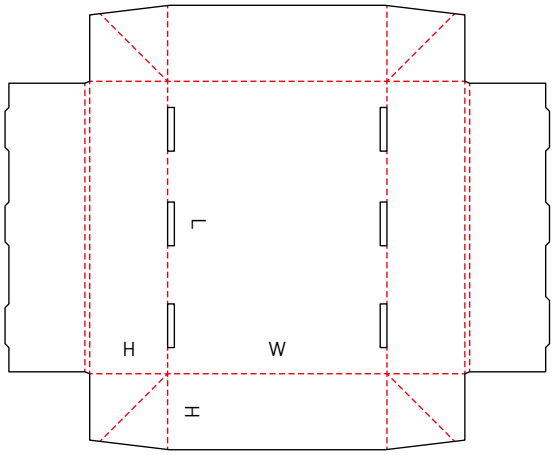

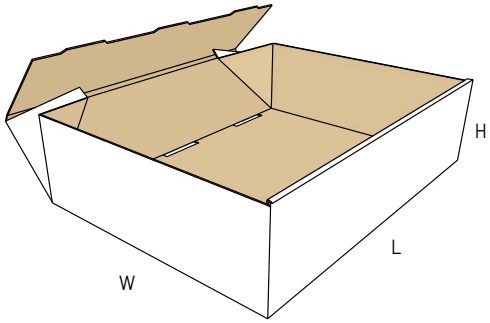

0462 M

NEW

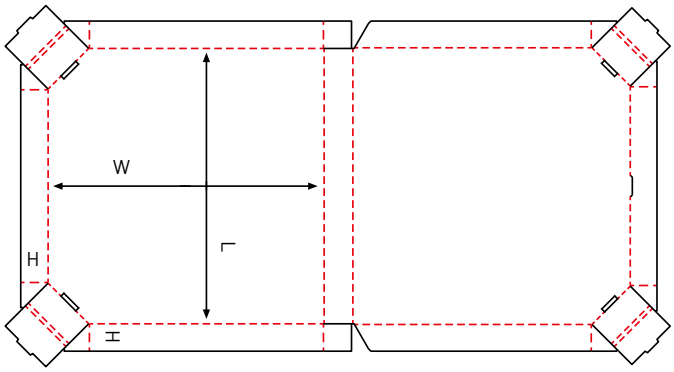

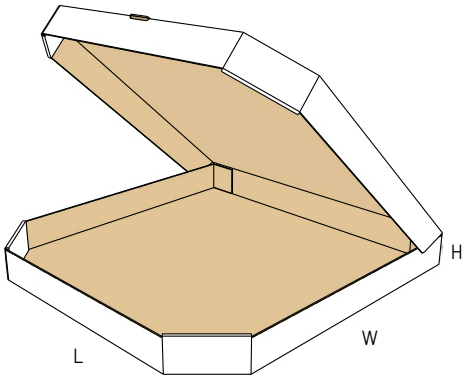

0463 M

NEW

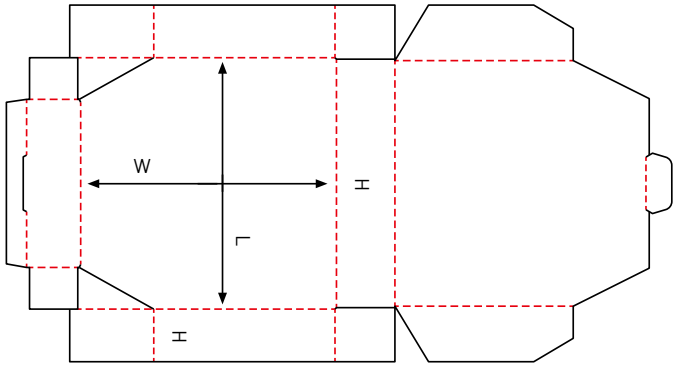

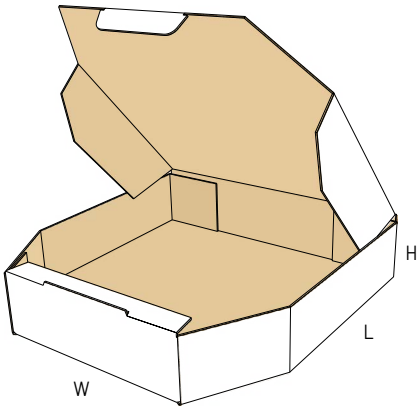

© 2022, 12th Edition - All rights reserved.

0464 M

NEW

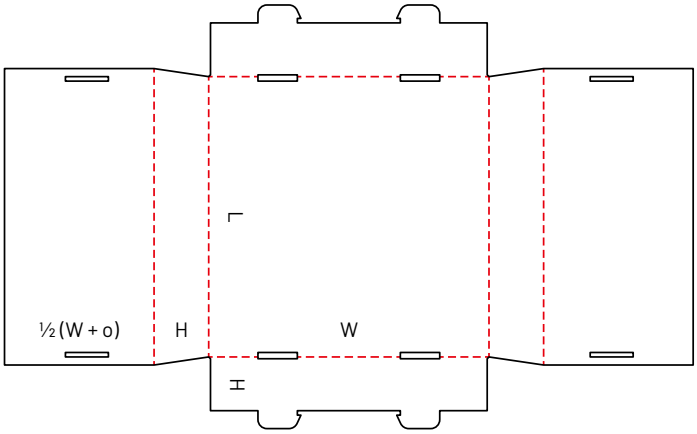

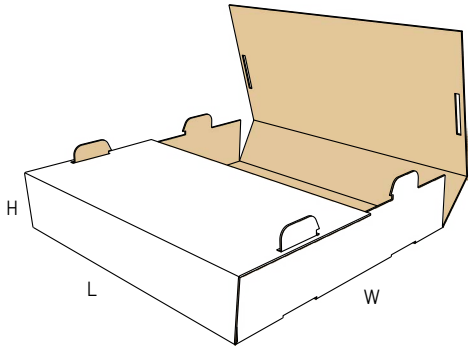

0465 M

NEW

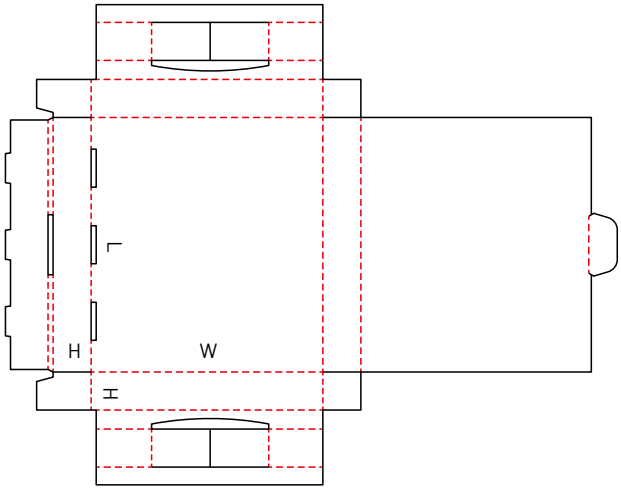

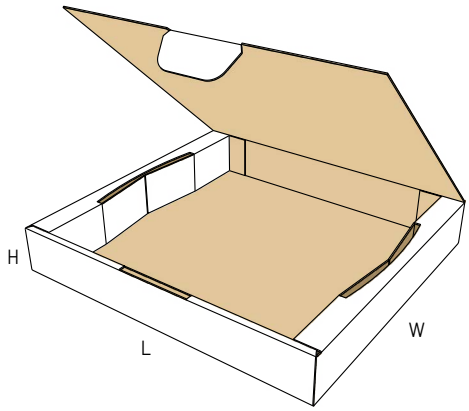

0466 M

NEW

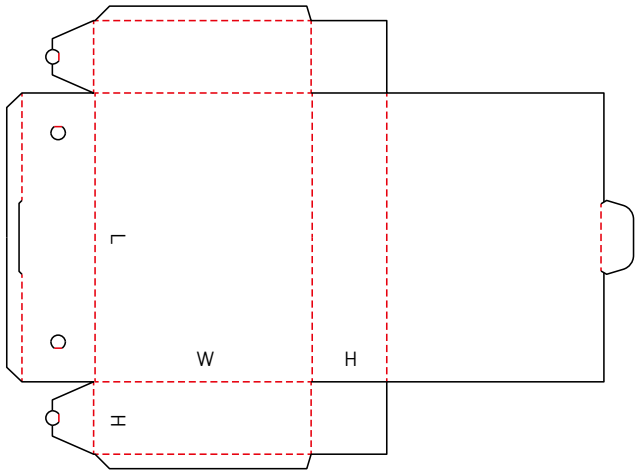

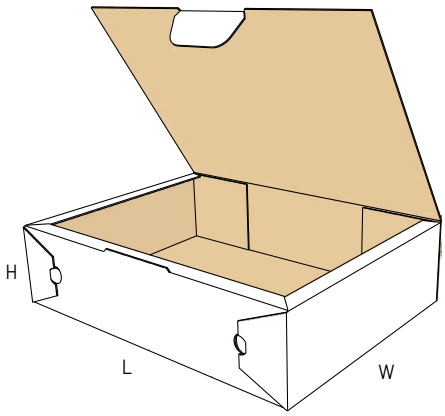

© 2022, 12th Edition - All rights reserved.

0469 M

NEW

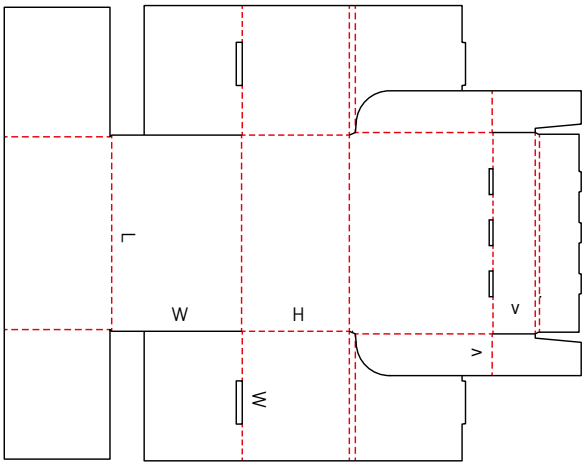

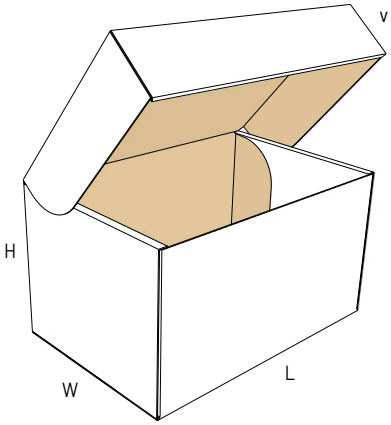

0470 M

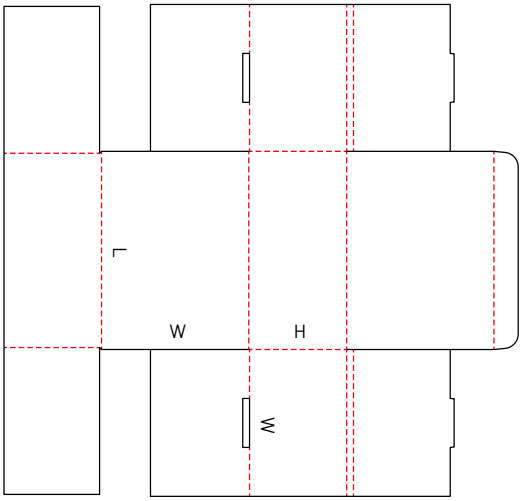

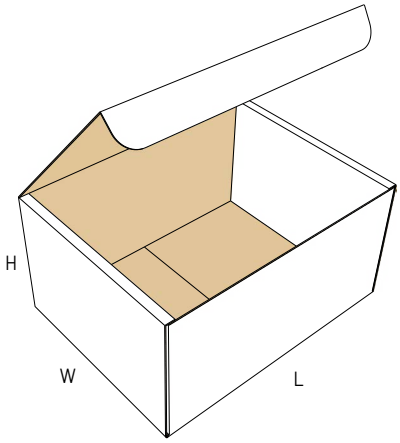

0471 M

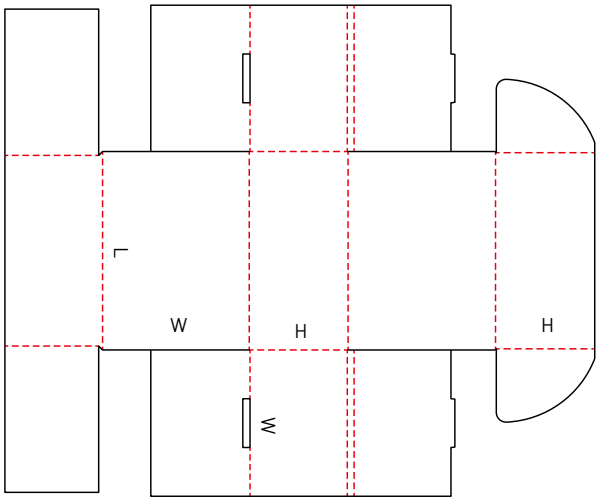

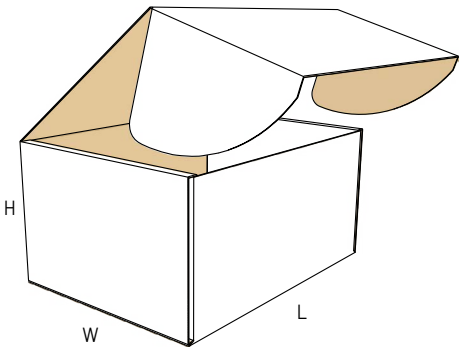

© 2022, 12th Edition - All rights reserved.

0472 M

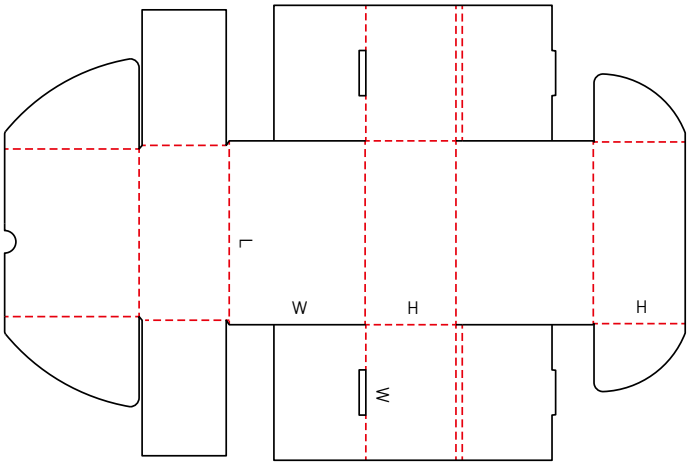

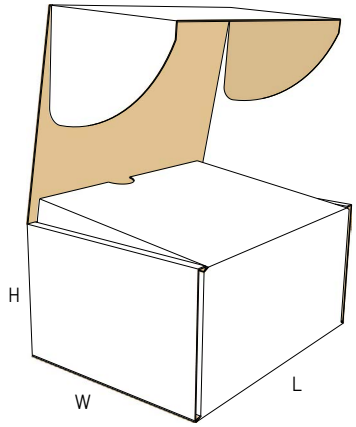

0473 M

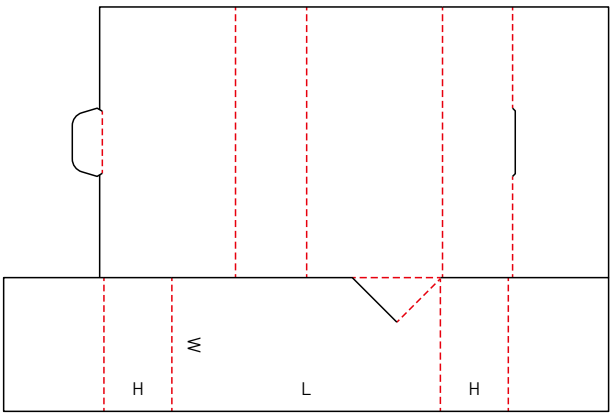

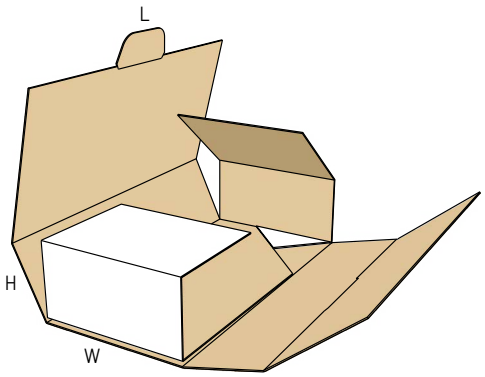

0474 M

NEW

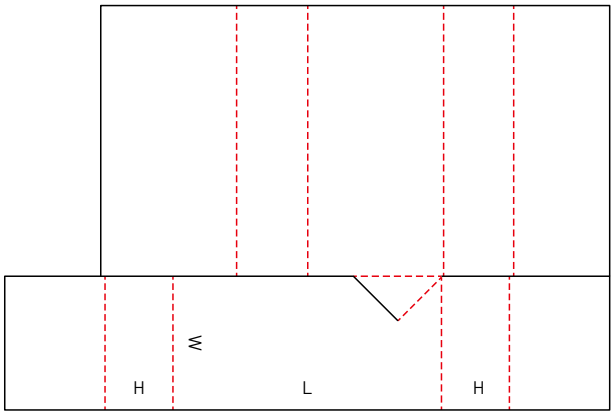

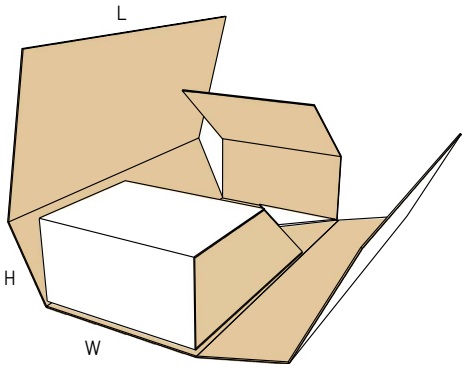

© 2022, 12th Edition - All rights reserved.

0475 M

NEW

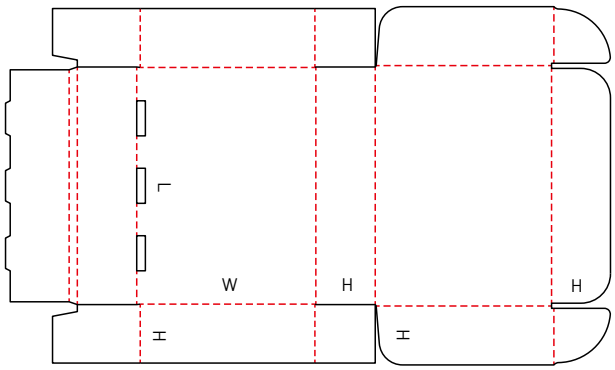

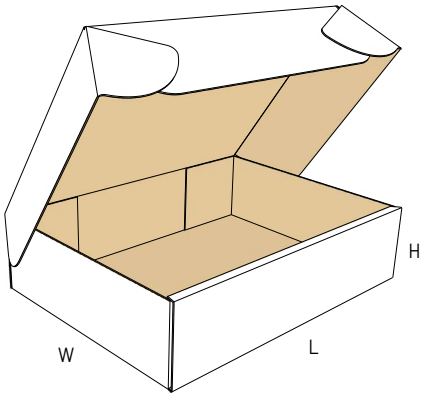

0476 M

NEW

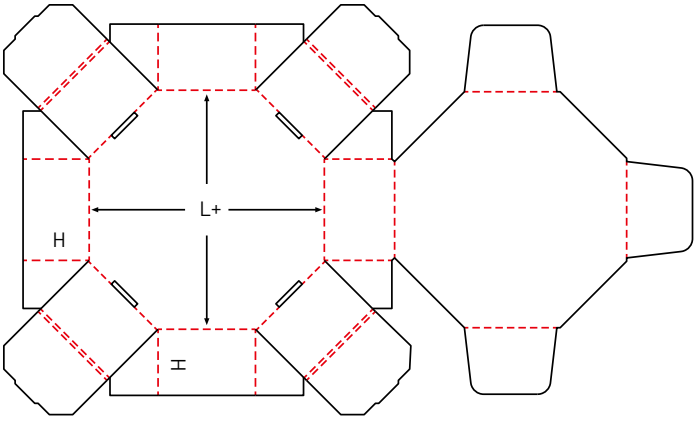

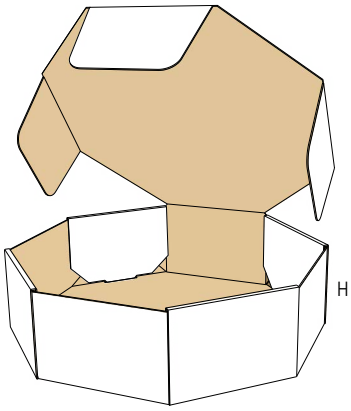

0480 A

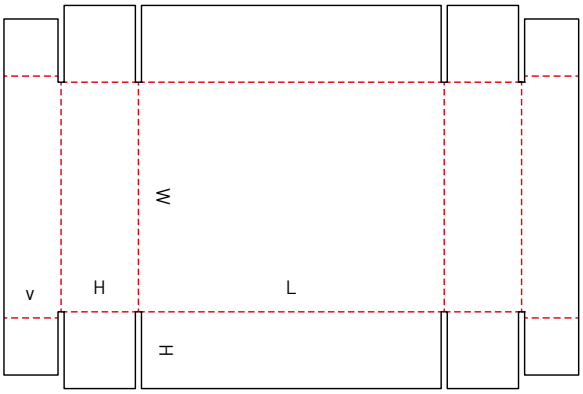

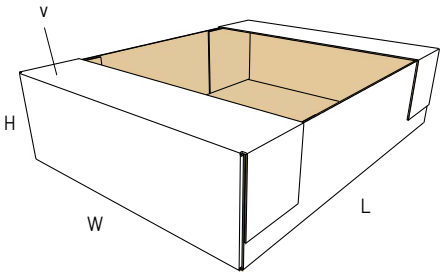

© 2022, 12th Edition - All rights reserved.

0481 M

NEW

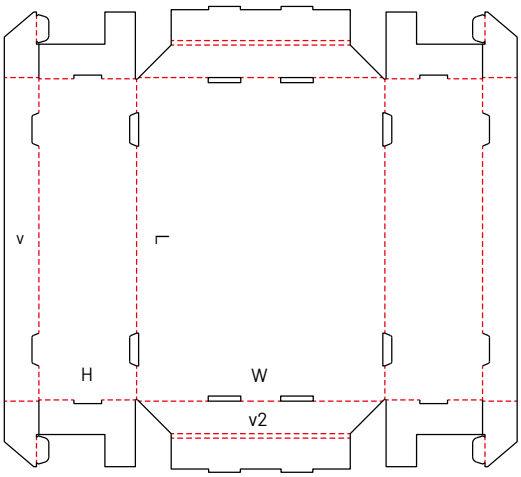

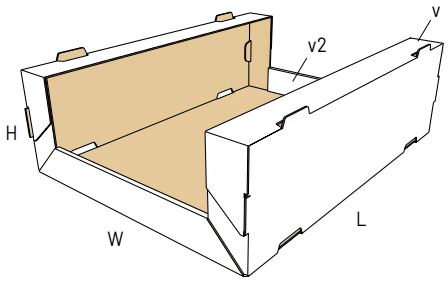

0482 M

NEW

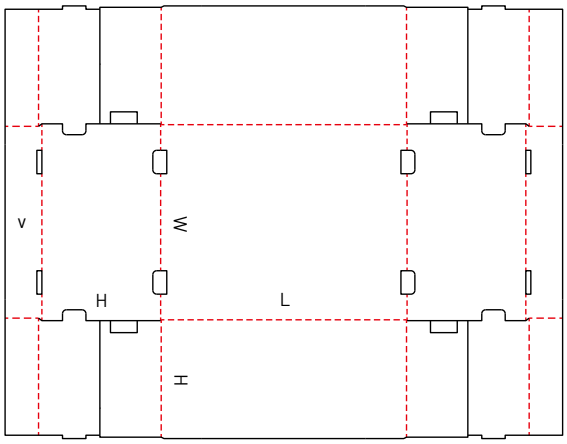

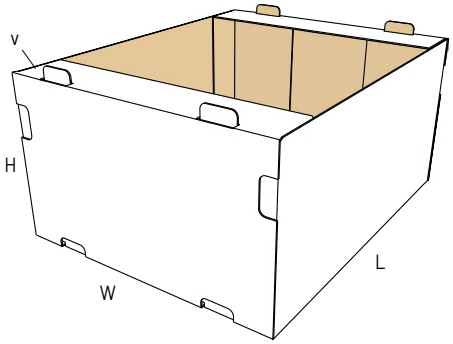

0483 A

NEW

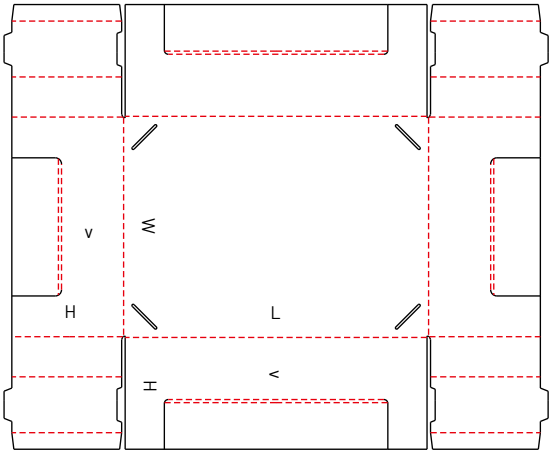

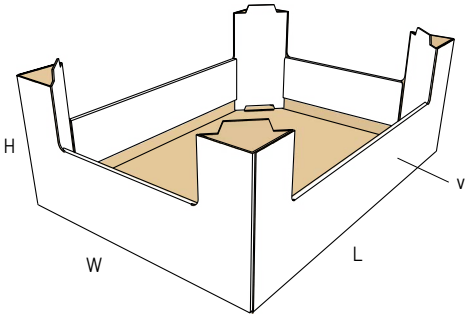

© 2022, 12th Edition - All rights reserved.

0484 M

NEW

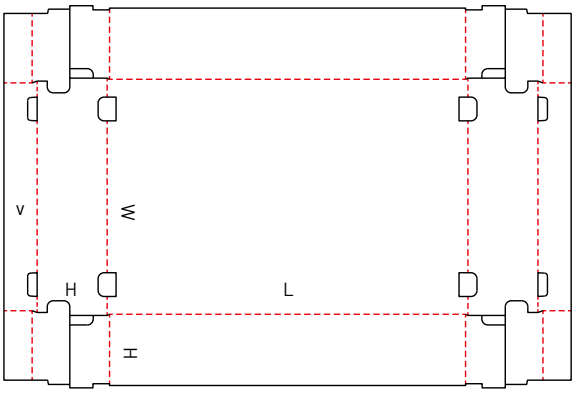

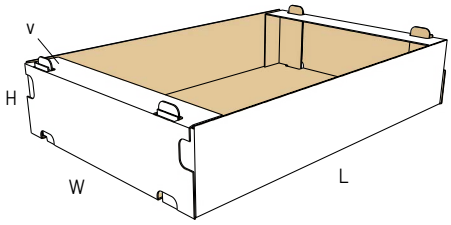

0485 M

NEW

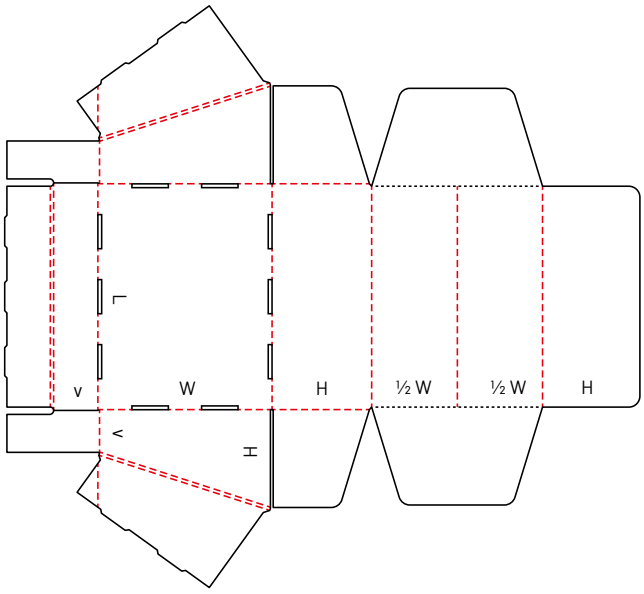

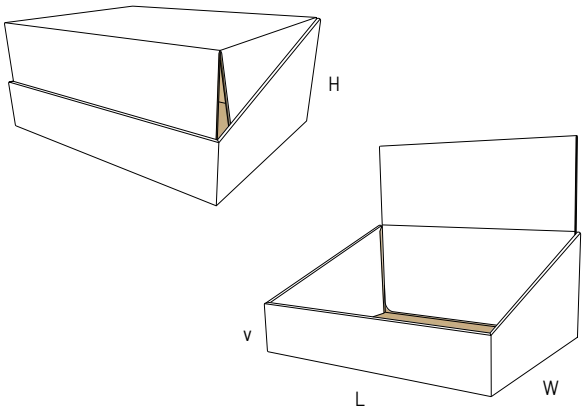

© 2022, 12th Edition - All rights reserved.

SLIDE BOXES

Slide boxes consist of several pieces of liners and sleeves sliding in different directions into each other.
This group also includes outside sleeves for other cases.

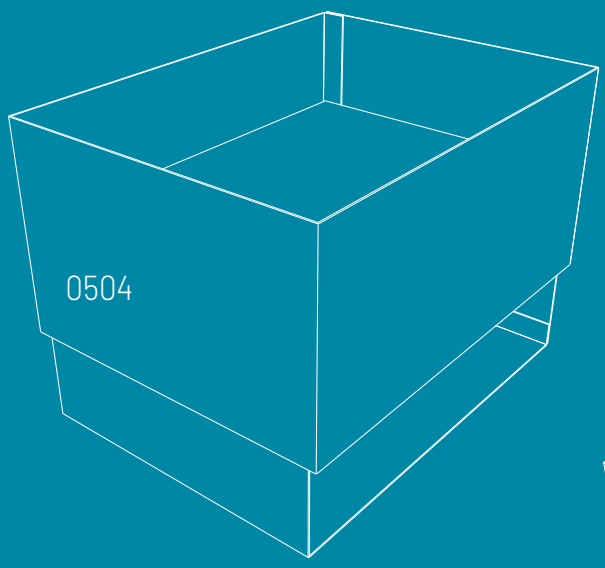

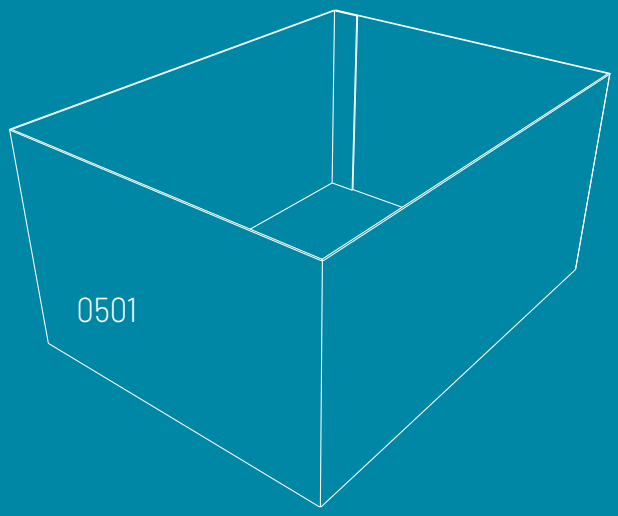

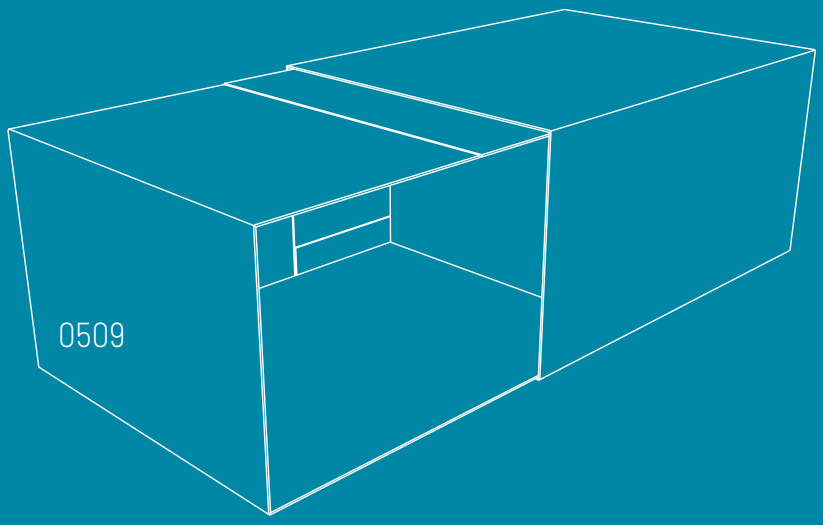

0501 M

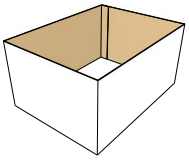

0502 M

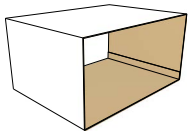

0503 M

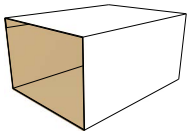

0504 M

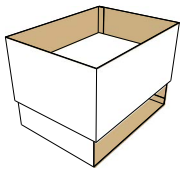

0505 M

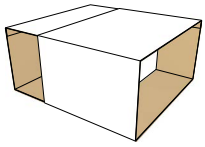

0507 M

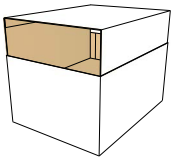

0509 M

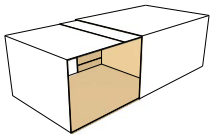

0510 M

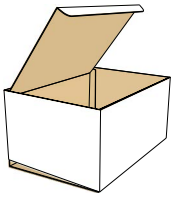

0511 M

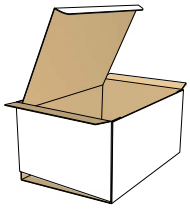

0512 M

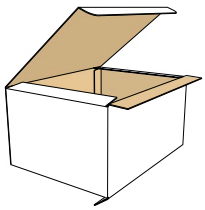

© 2022, 12th Edition - All rights reserved.

0501 M

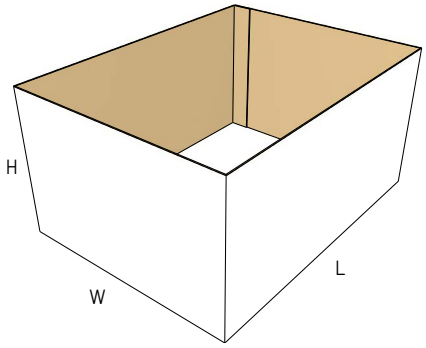

0502 M

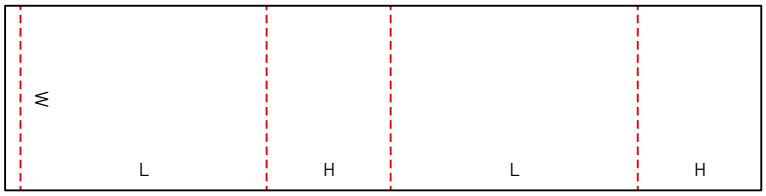

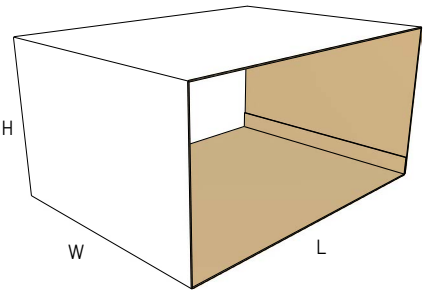

0503 M

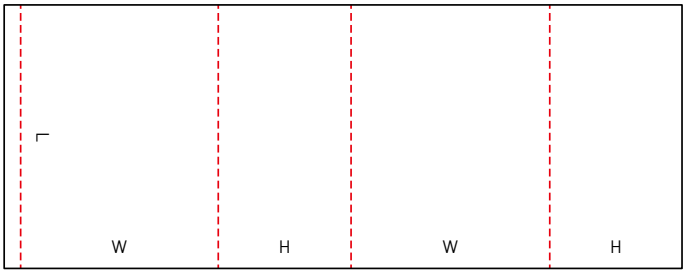

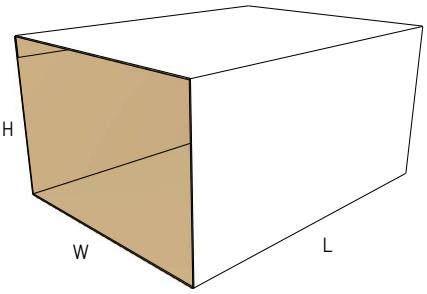

© 2022, 12th Edition - All rights reserved.

0504 M

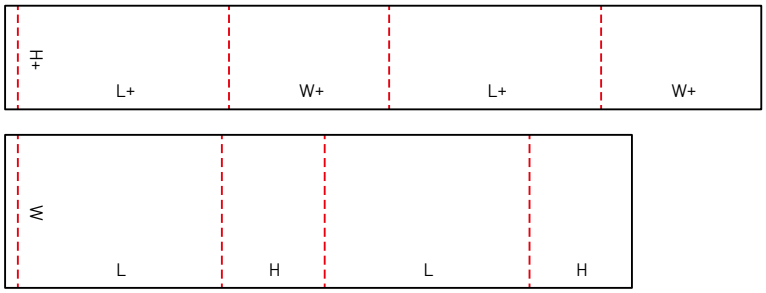

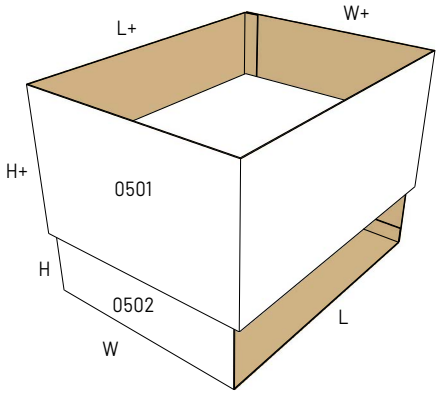

0505 M

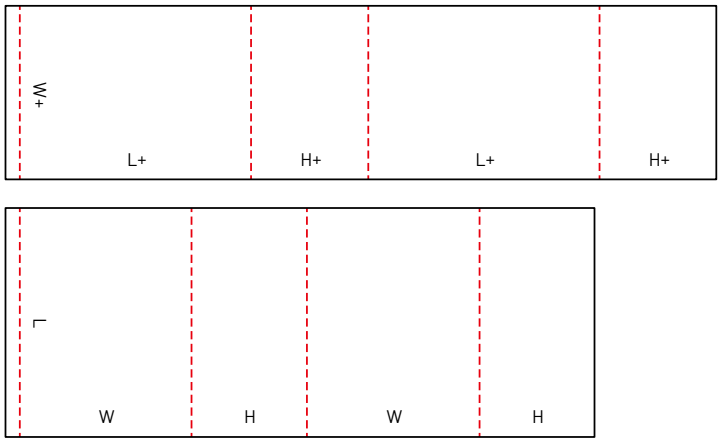

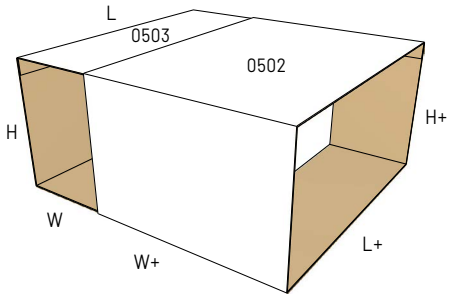

0507 M

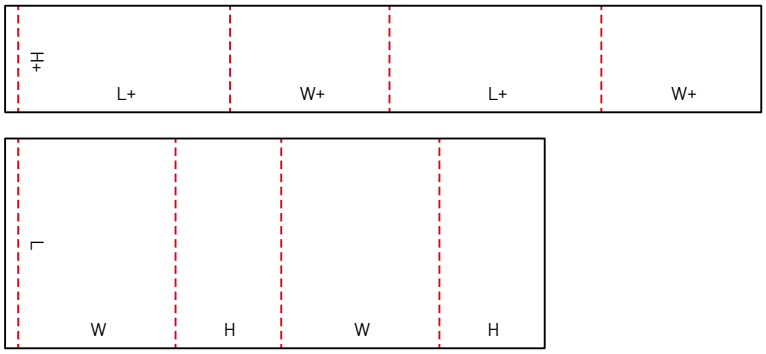

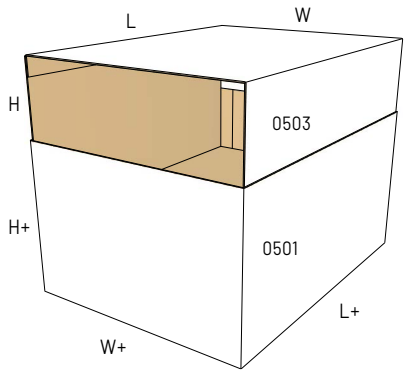

© 2022, 12th Edition - All rights reserved.

0509 M

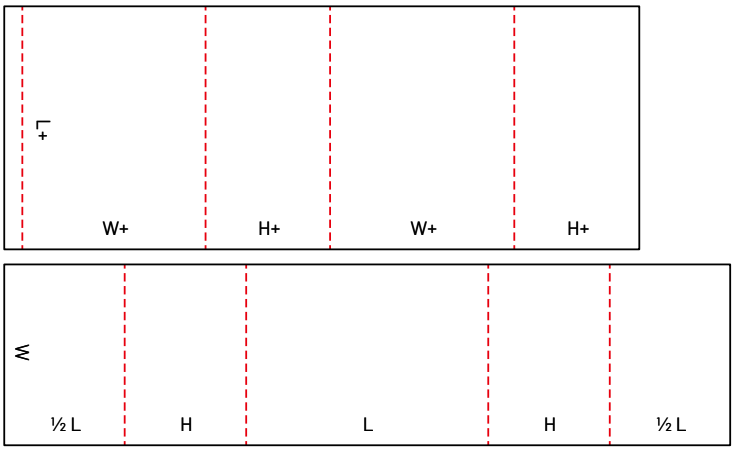

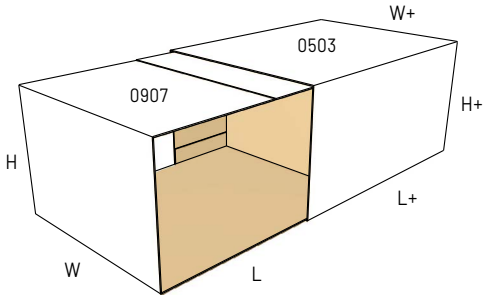

0510 M

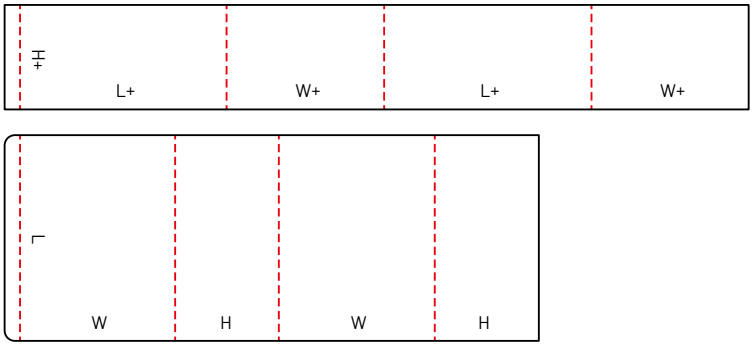

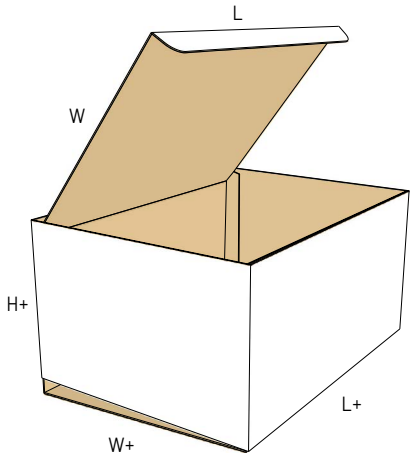

0511 M

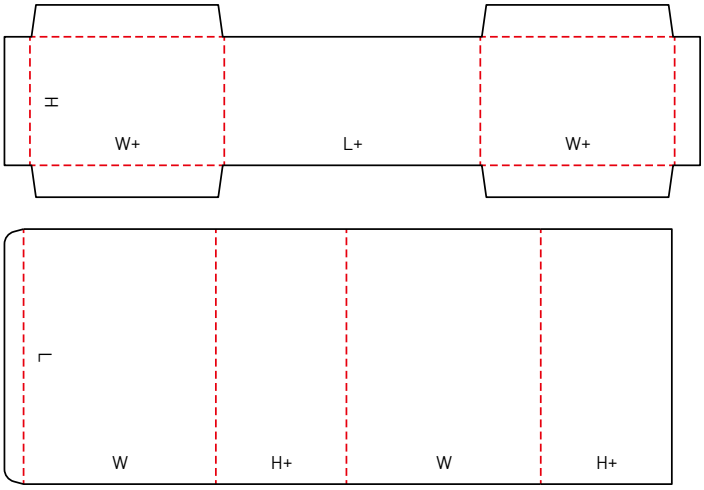

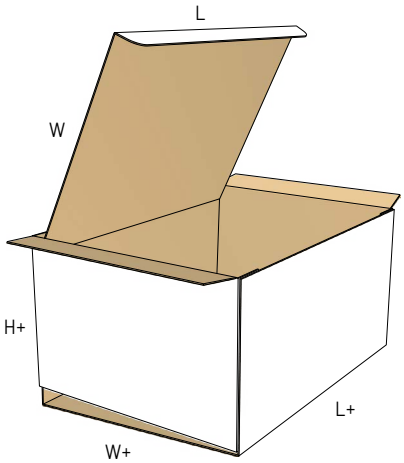

© 2022, 12th Edition - All rights reserved.

0512 M

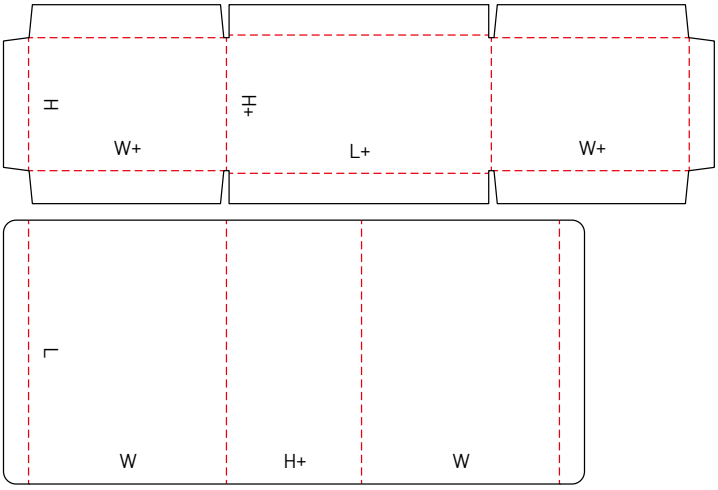

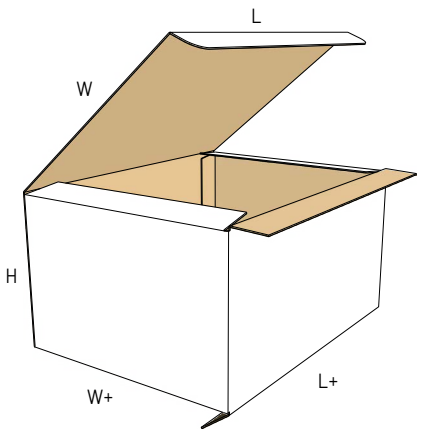

© 2022, 12th Edition - All rights reserved.

RIGID BOXES

Rigid boxes consist of two separate end pieces and a body that require stitching or a similar operation before they can be used.

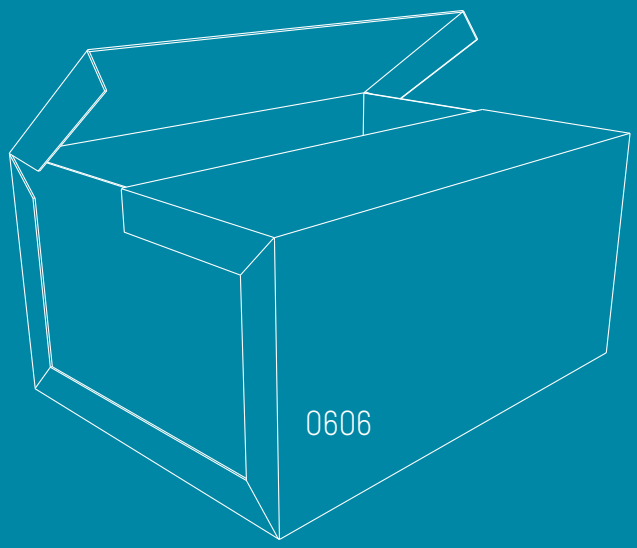

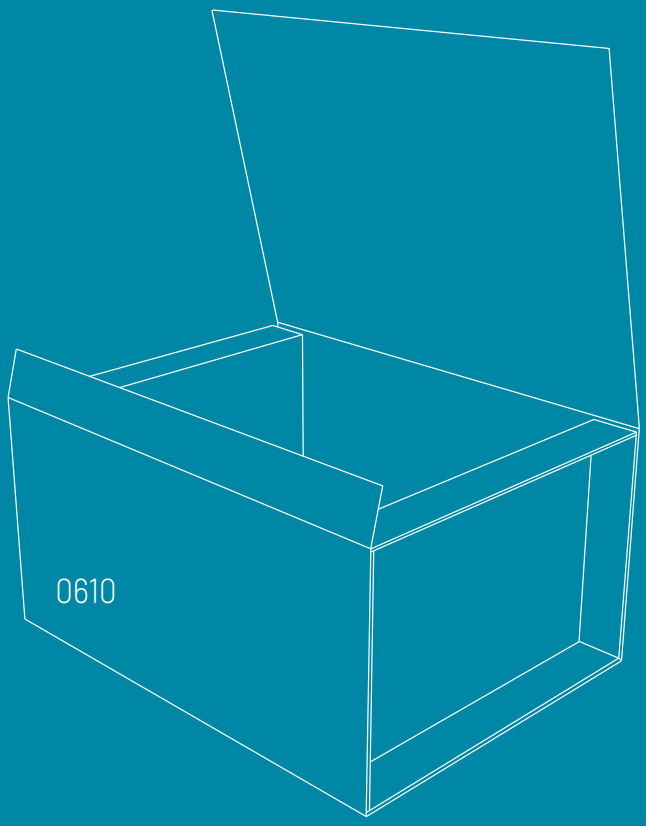

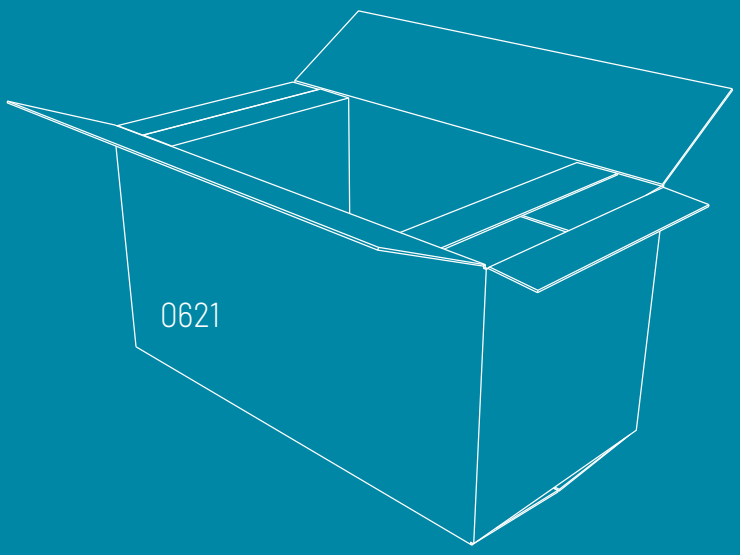

0601 A

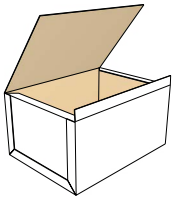

0602 A

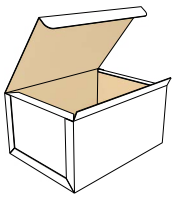

0605 A

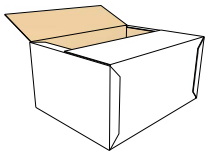

0606 A

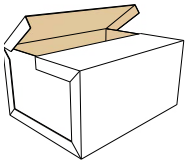

0607 A

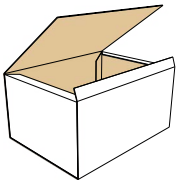

0608 A

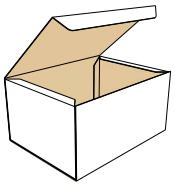

0610 M/A

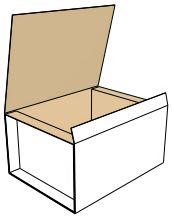

0615 M/A

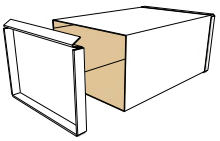

0616 M/A

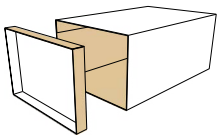

0620 A

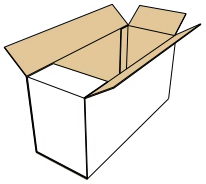

0621 M

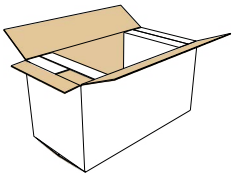

© 2022, 12th Edition - All rights reserved.

0601 A

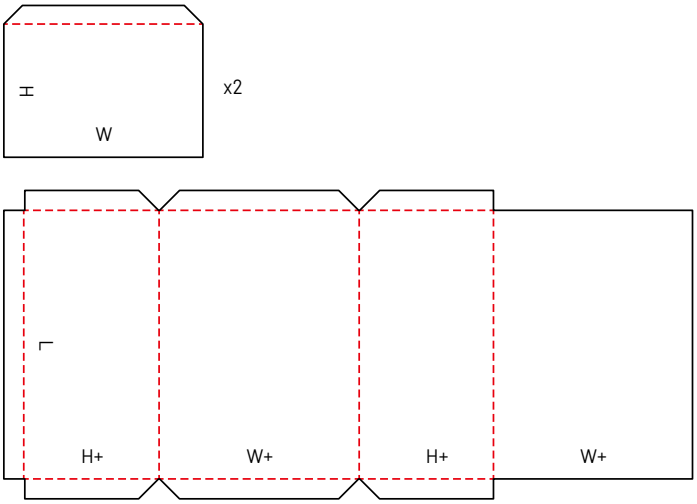

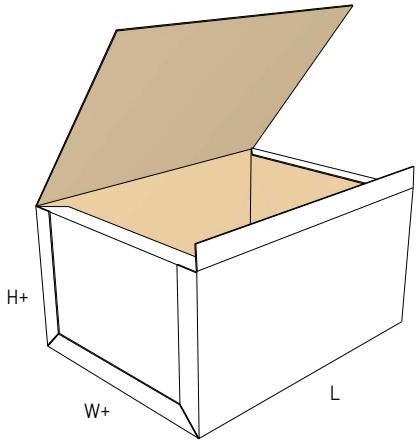

0602 A

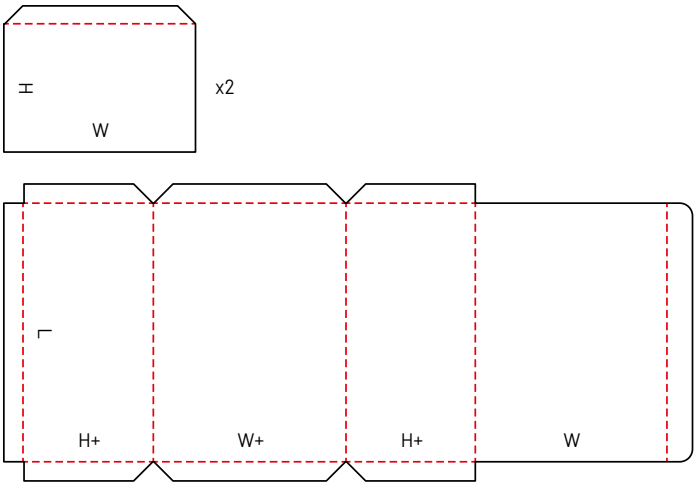

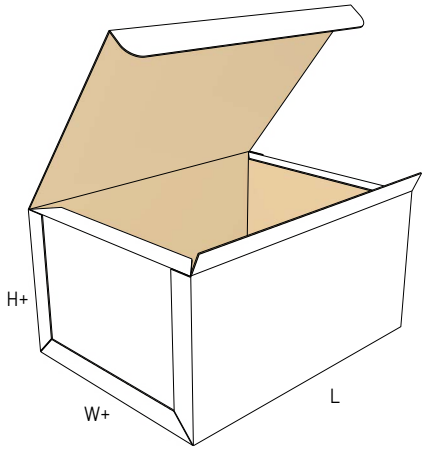

0605 A

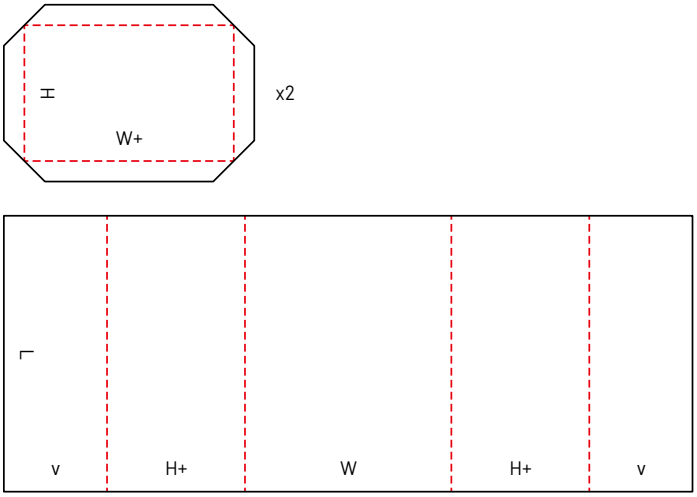

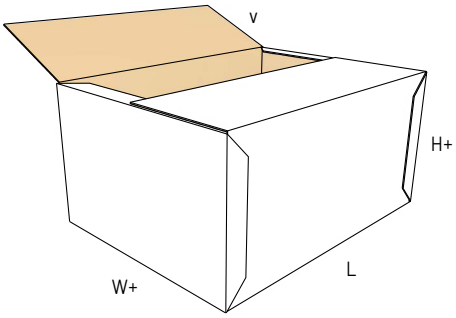

© 2022, 12th Edition - All rights reserved.

0606 A

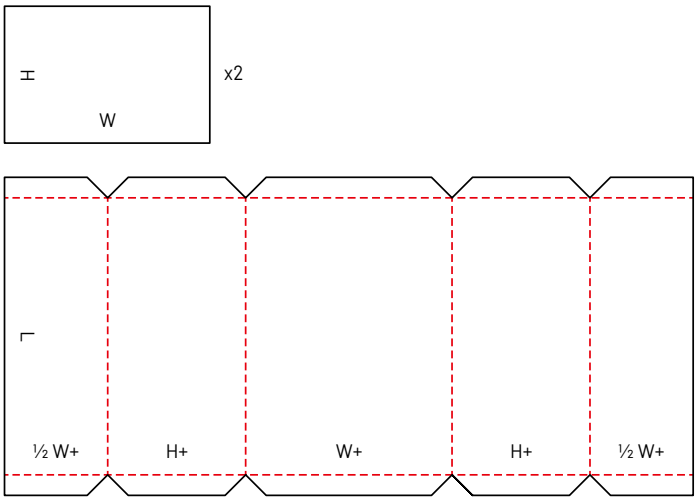

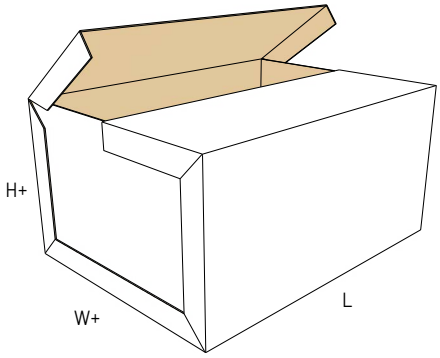

0607 A

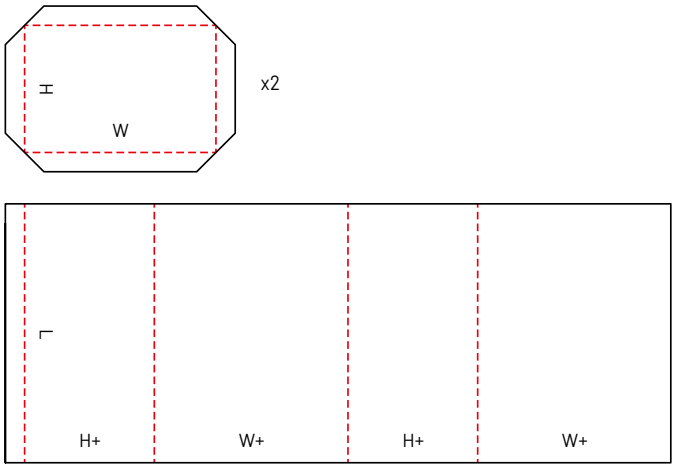

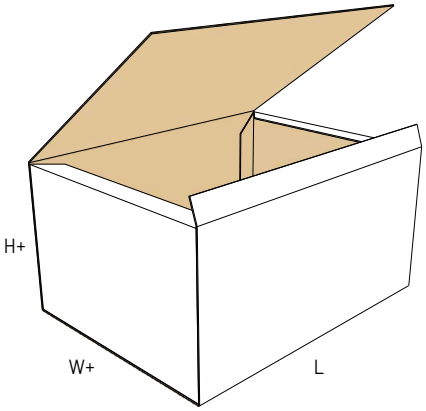

0608 A

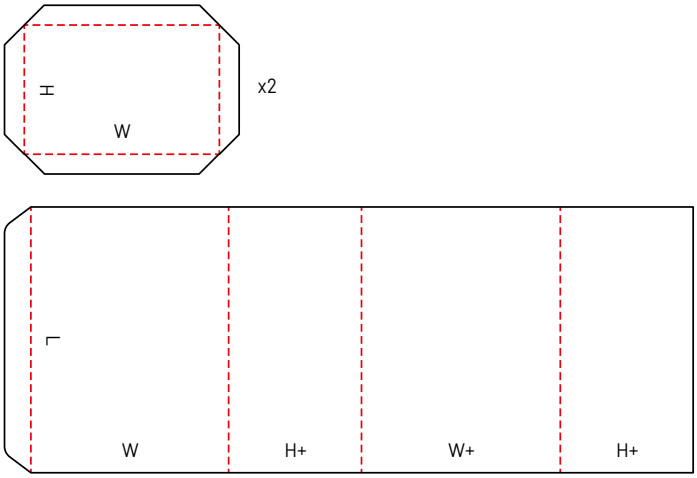

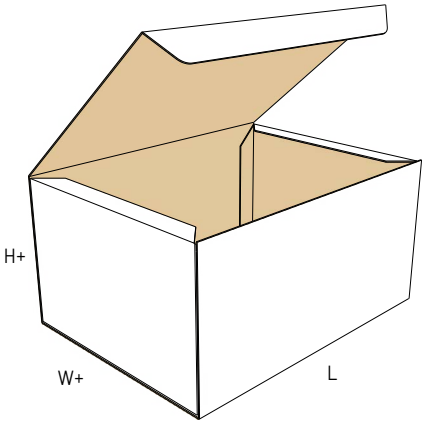

© 2022, 12th Edition - All rights reserved.

0610 M/A

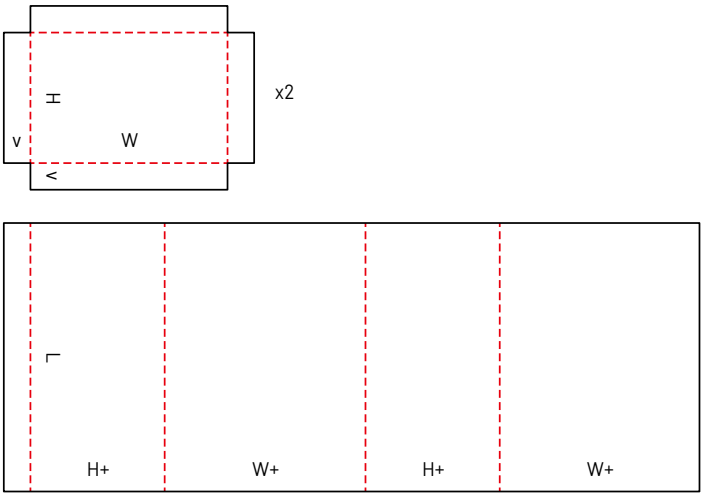

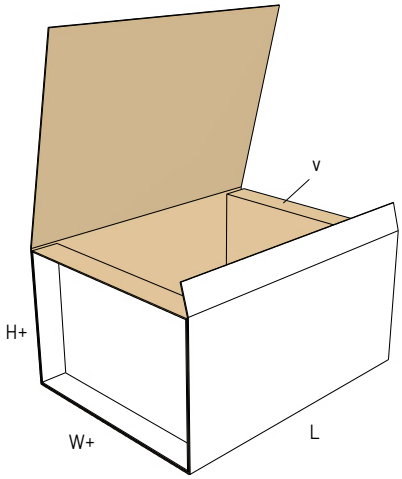

0615 M/A

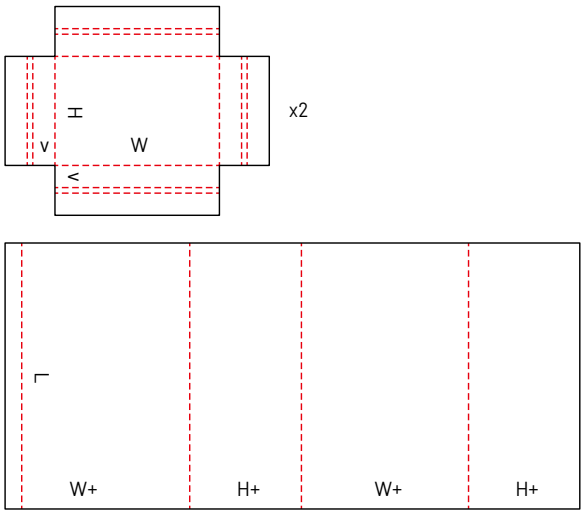

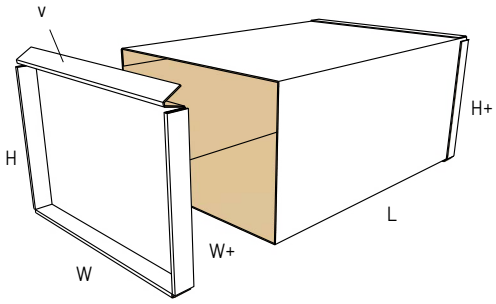

0616 M/A

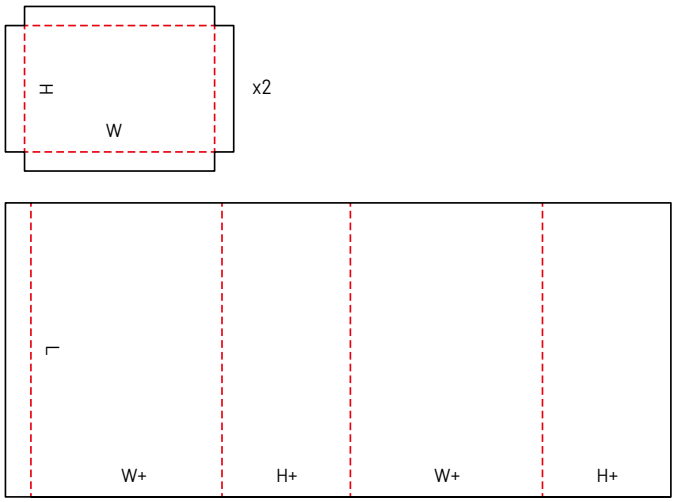

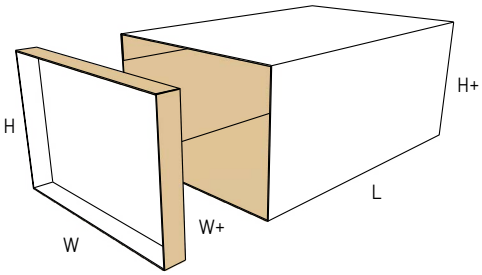

© 2022, 12th Edition - All rights reserved.

0620 A

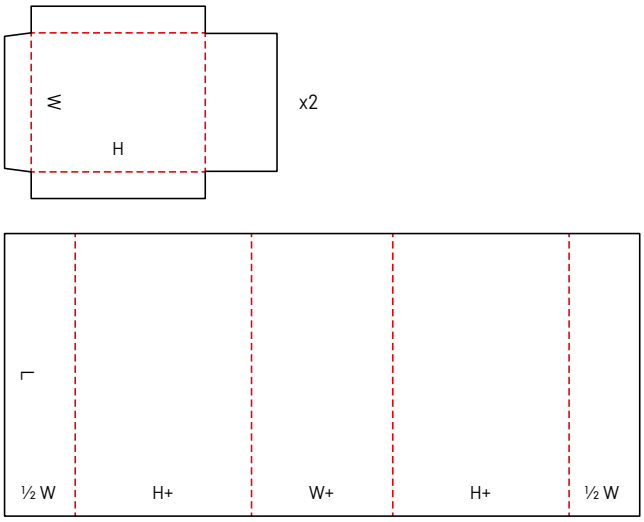

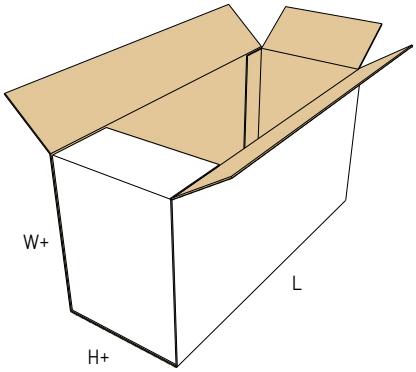

0621 M

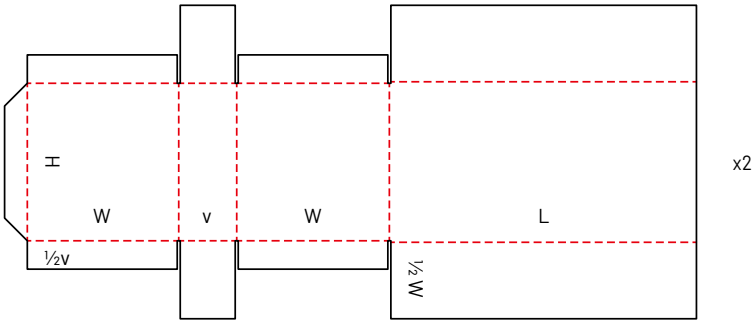

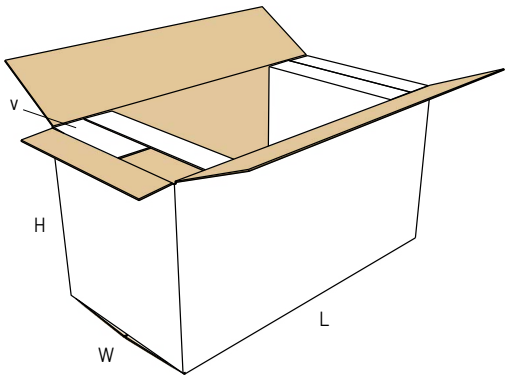

© 2022, 12th Edition - All rights reserved.

READY-GLUED CASES

Ready-glued cases consist of basically one piece,
are shipped flat and ready to use by simple assembly.

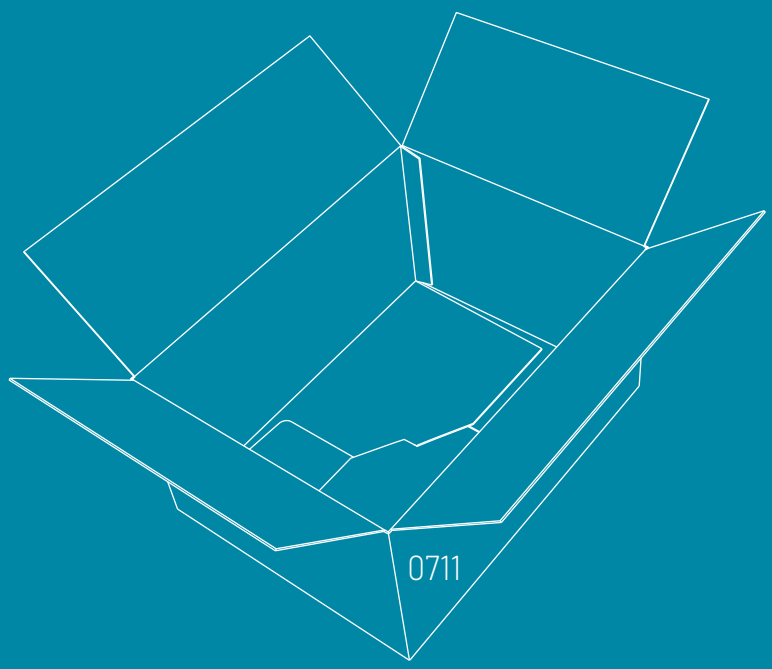

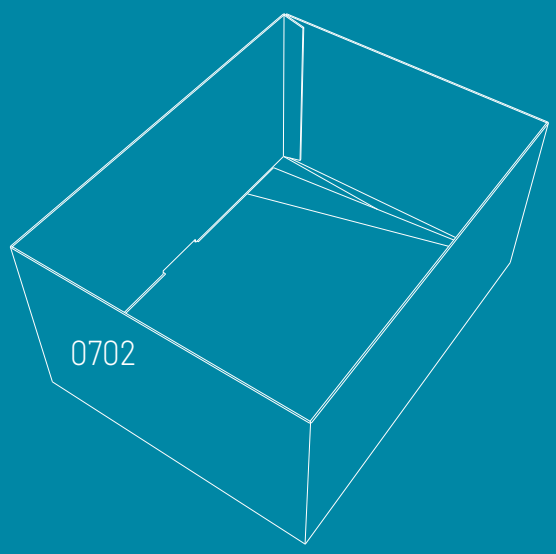

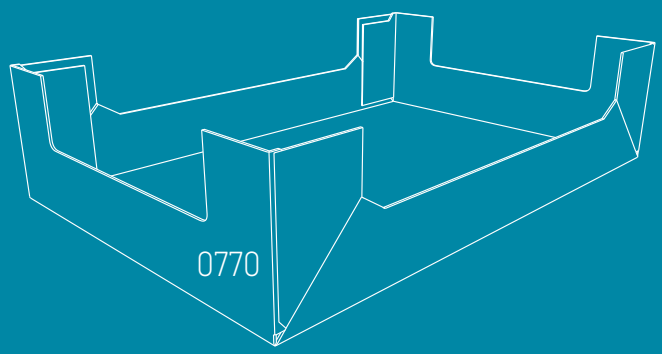

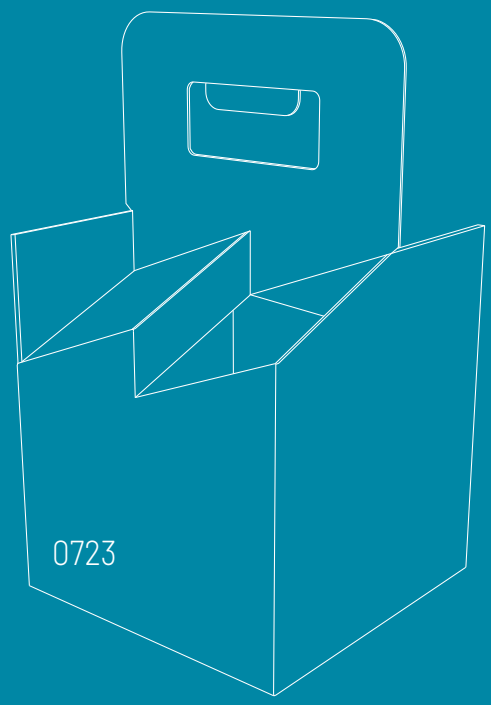

0700 M

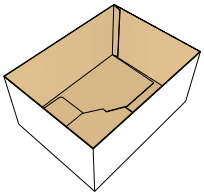

0701 M

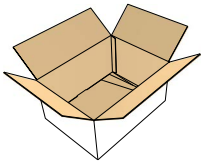

0702 M
NEW

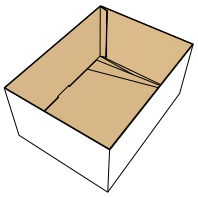

0703 M

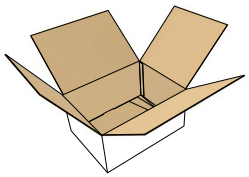

0704 M
NEW

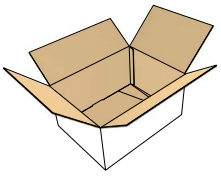

0705 M
NEW

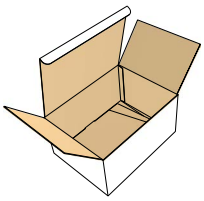

0706 M
NEW

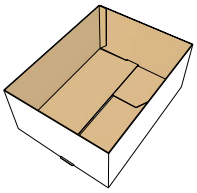

0707 M
NEW

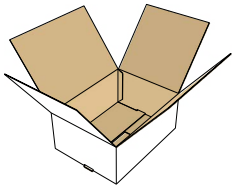

0708 M
NEW

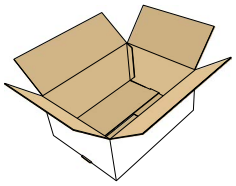

0709 M
NEW

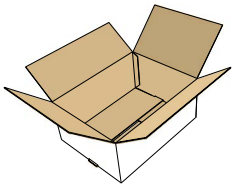

0710 M
NEW

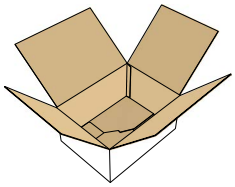

0711 M

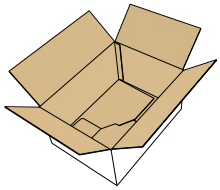

0712 M

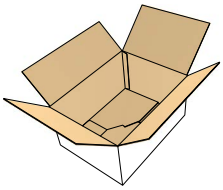

0713 M

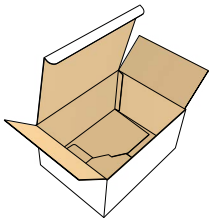

0714 M

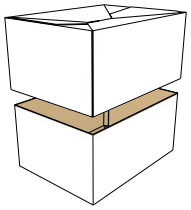

0715 M

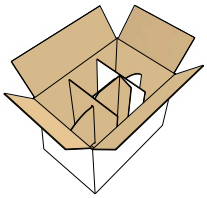

0716 M

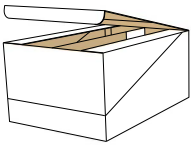

0717 M

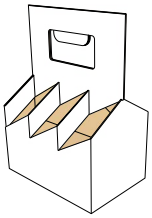

0718 M

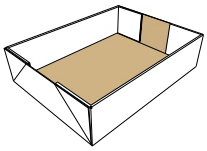

0719 M
NEW

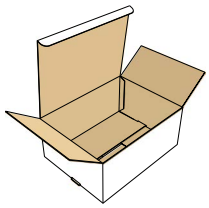

0720 M
NEW

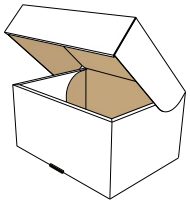

0721 M
NEW

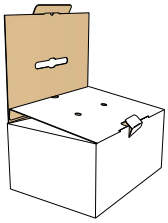

0722 M
NEW

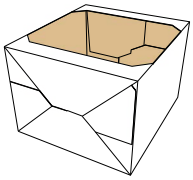

0723 M
NEW

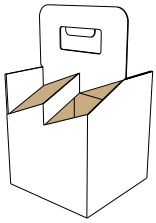

0724 M
NEW

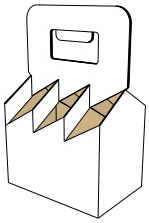

0725 M
NEW

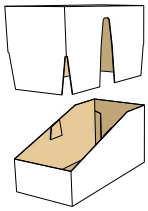

0726 M
NEW

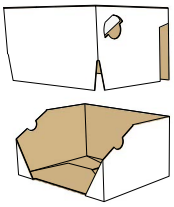

0727 A
NEW

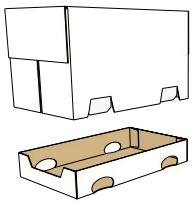

0728 M
NEW

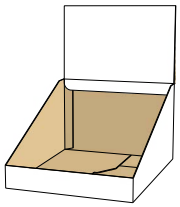

0730 M
NEW

© 2022, 12th Edition - All rights reserved.

0740 M
NEW

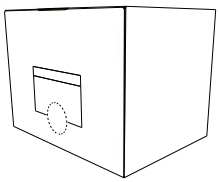

0747 M

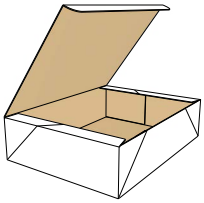

0748 M

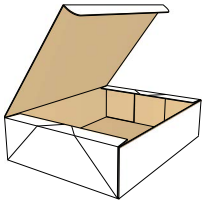

0751 M

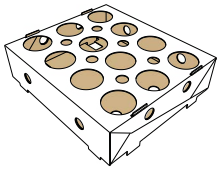

0752 M

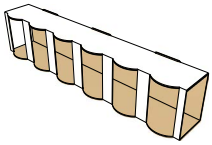

759 M

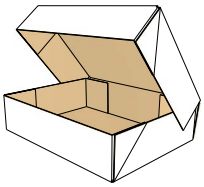

0761 M

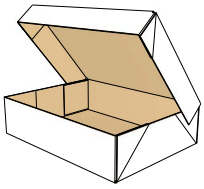

0770 M

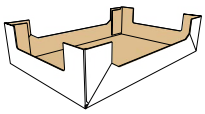

0771 M

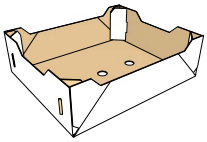

0772 M

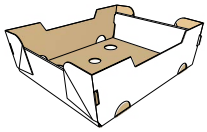

0773 M

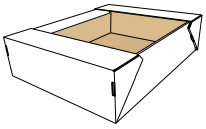

0774 M

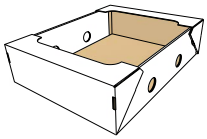

© 2022, 12th Edition - All rights reserved.

0700 M

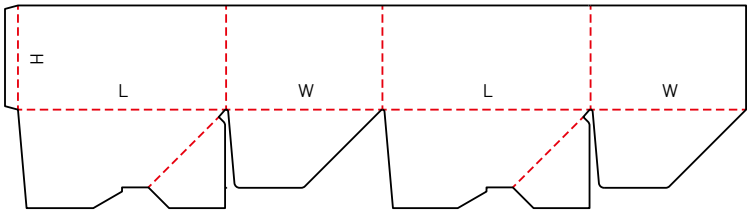

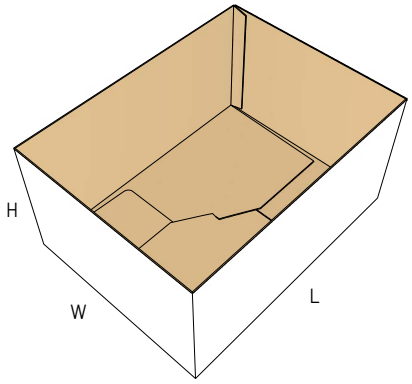

0701 M

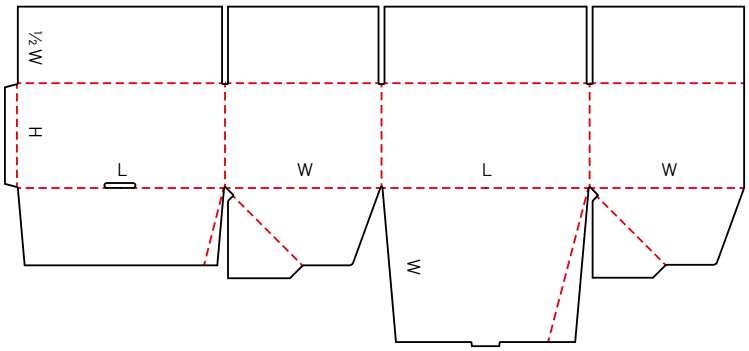

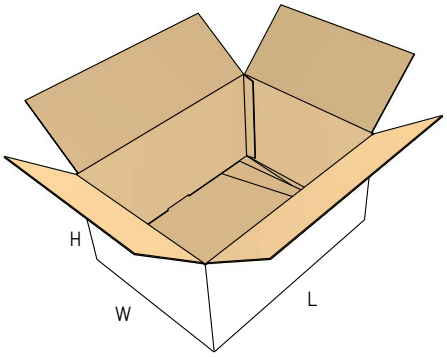

0702 M

NEW

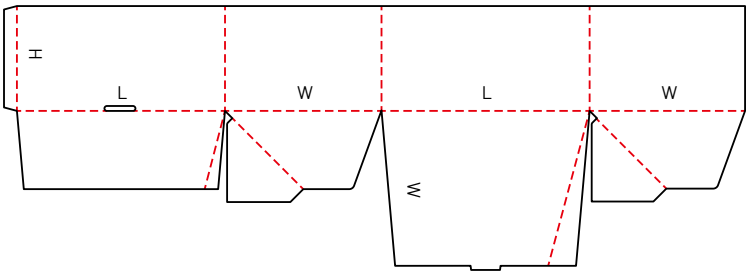

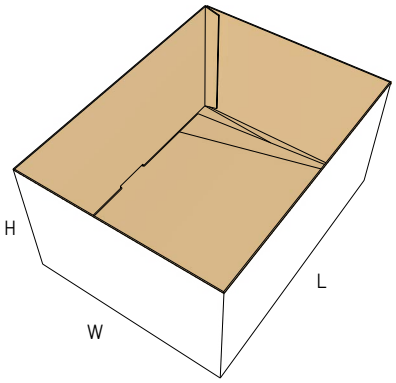

© 2022, 12th Edition - All rights reserved.

0703 M

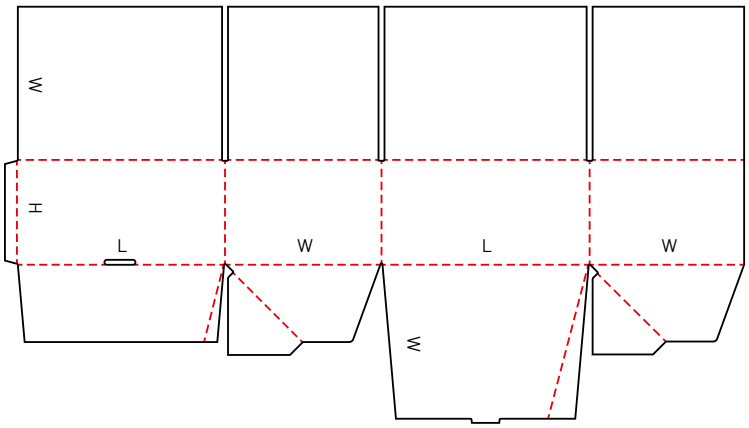

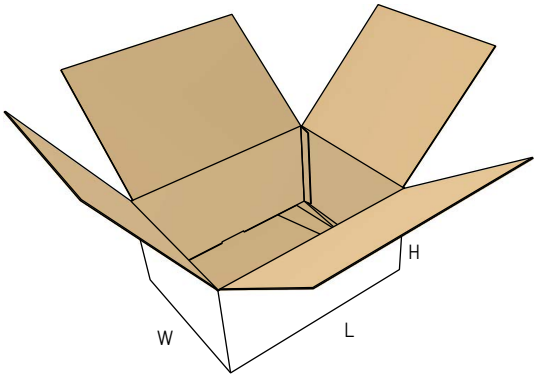

0704 M

NEW

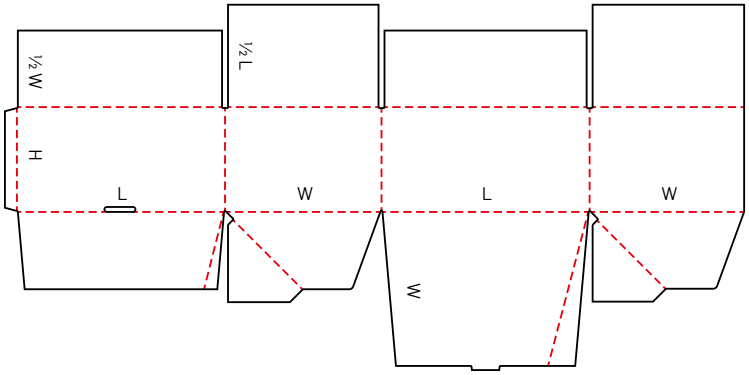

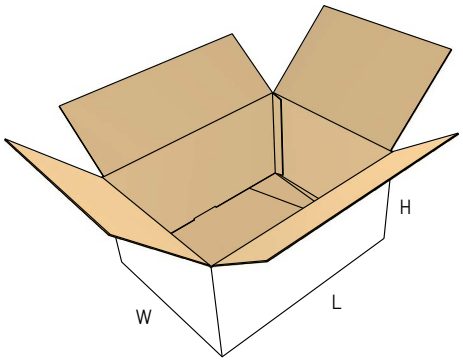

0705 M

NEW

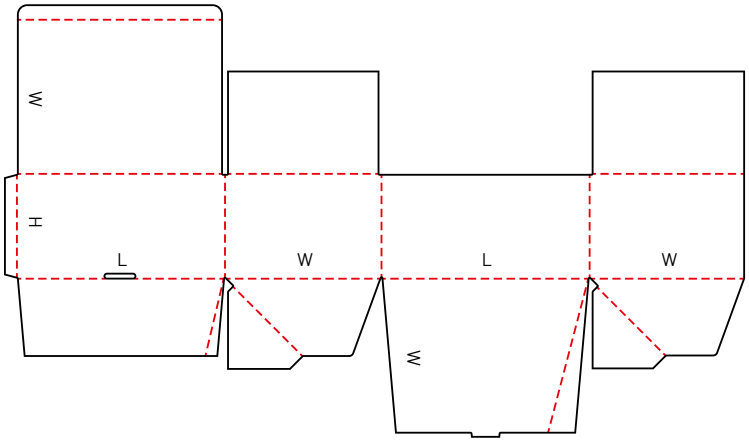

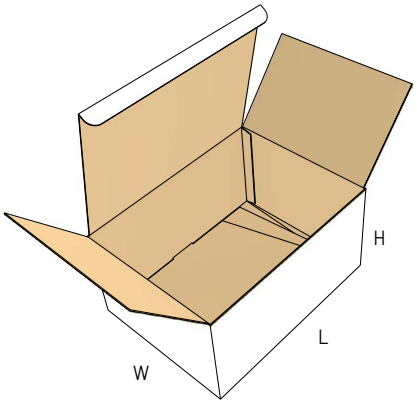

© 2022, 12th Edition - All rights reserved.

0706 M

NEW

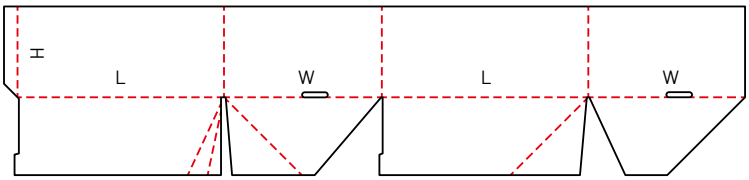

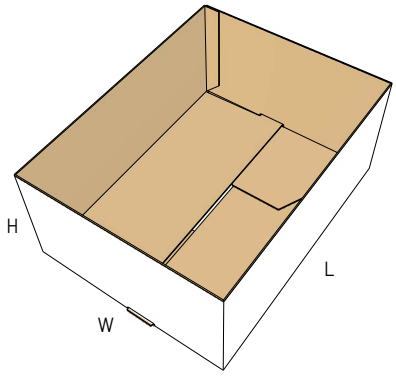

0707 M

NEW

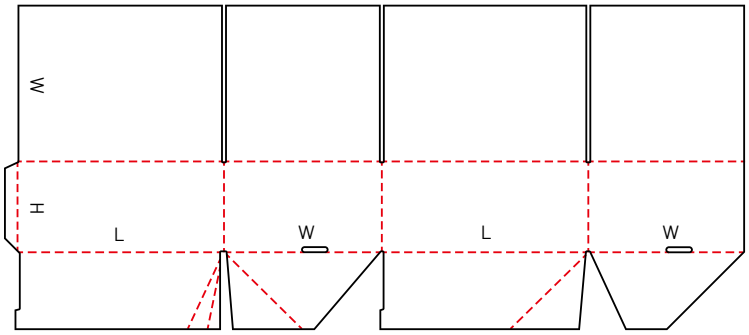

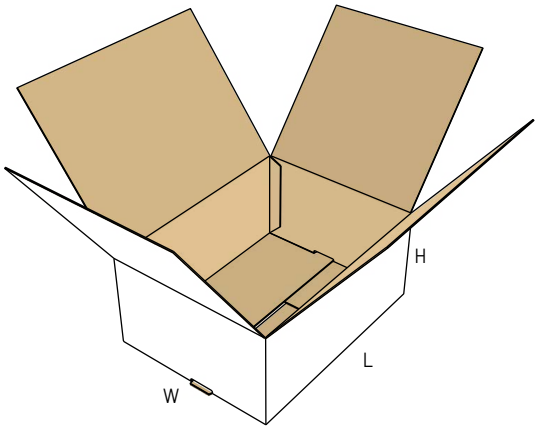

0708 M

NEW

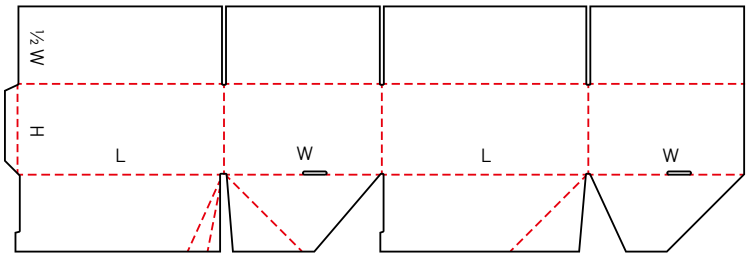

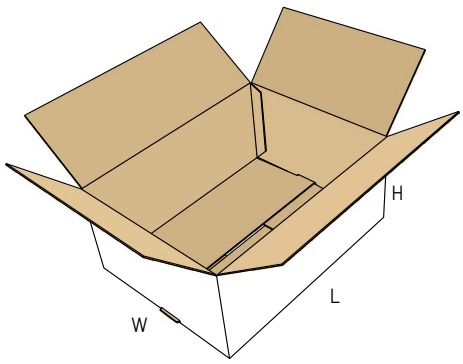

© 2022, 12th Edition - All rights reserved.

0709 M

NEW

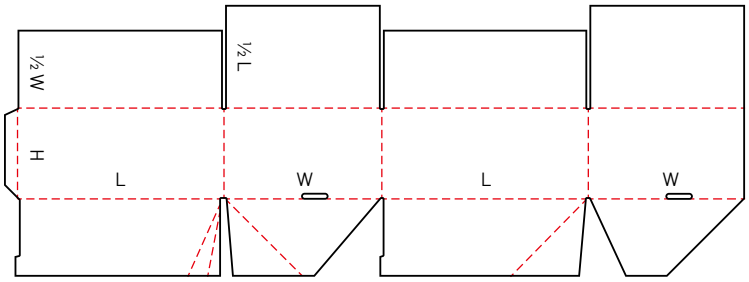

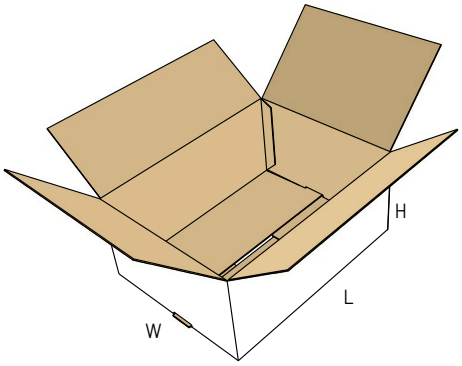

0710 M

NEW

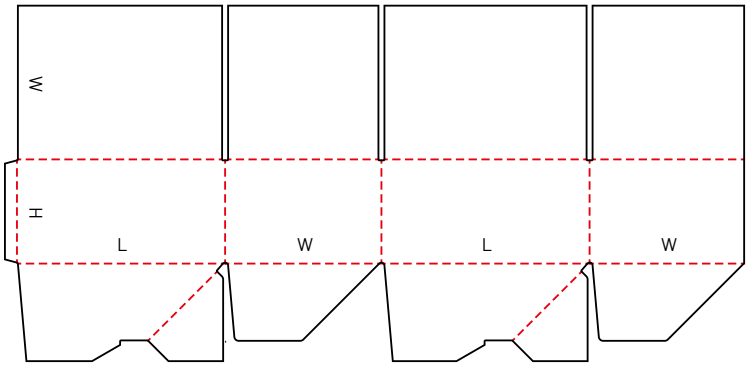

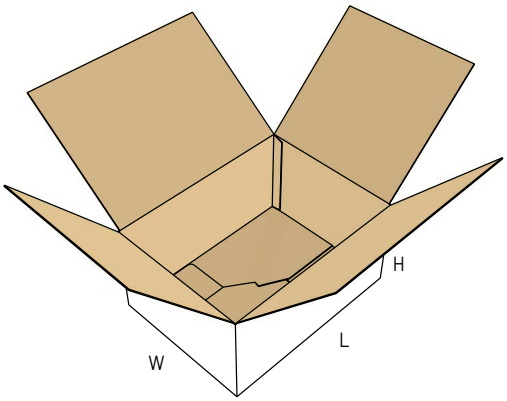

0711 M

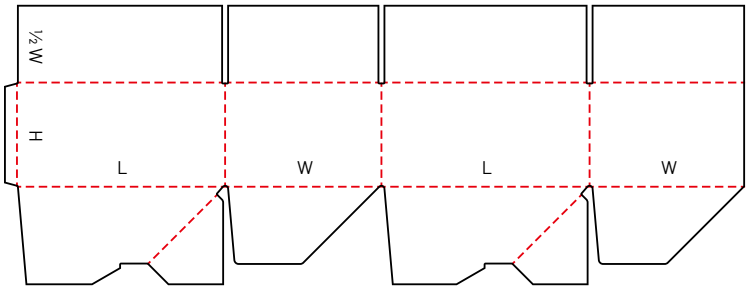

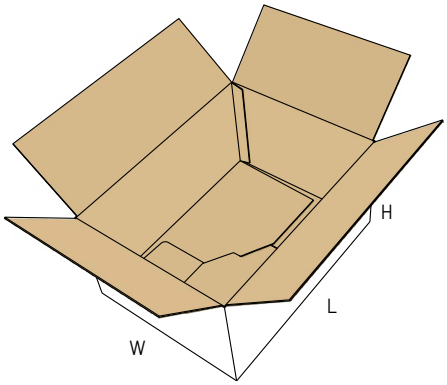

© 2022, 12th Edition - All rights reserved.

0712 M

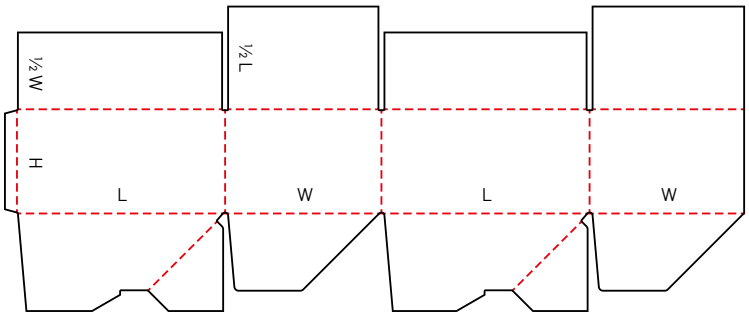

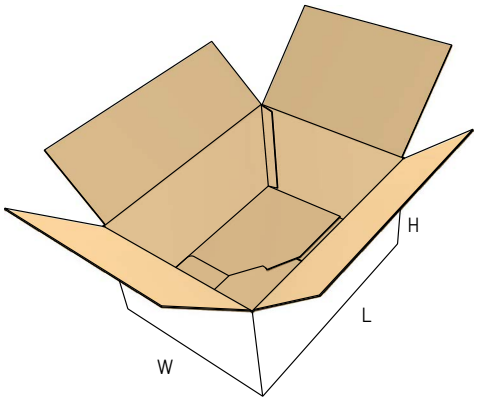

0713 M

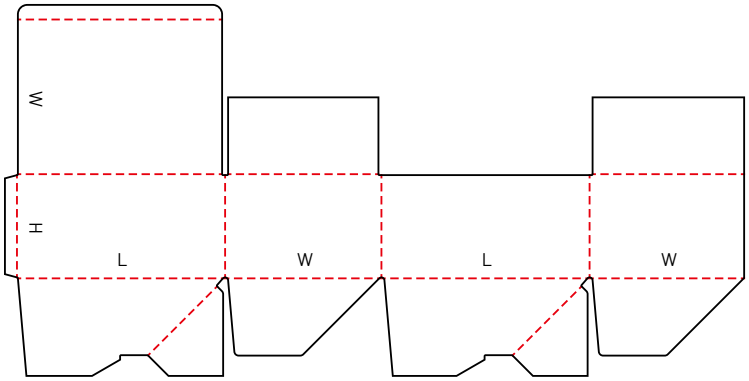

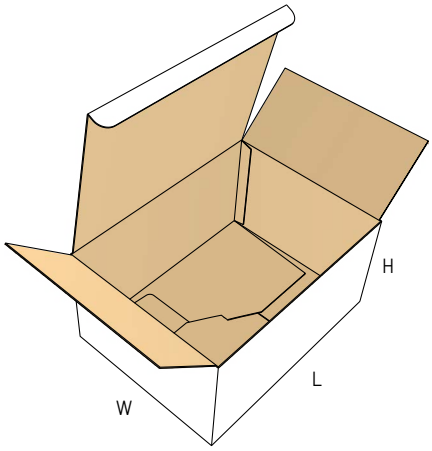

0714 M

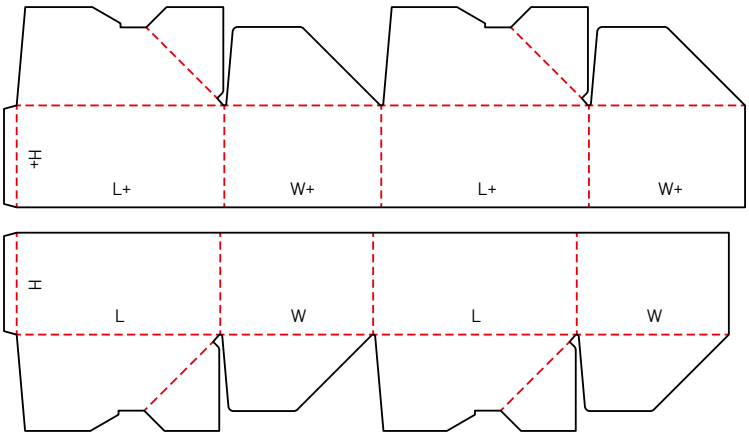

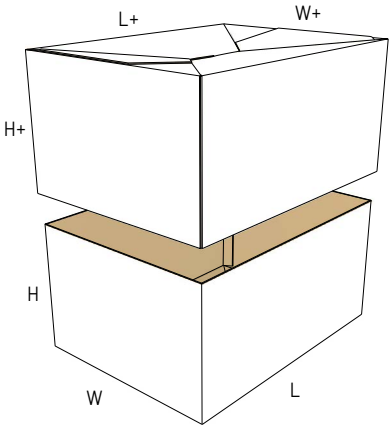

© 2022, 12th Edition - All rights reserved.

0715 M

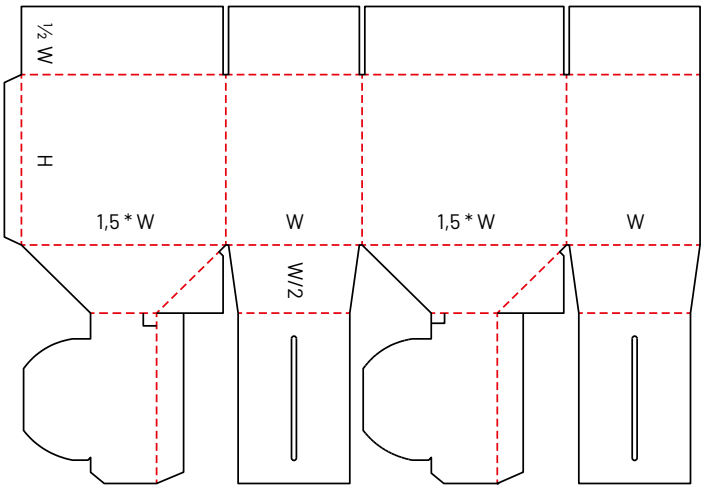

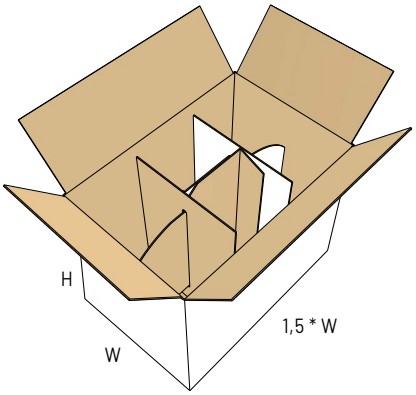

0716 M

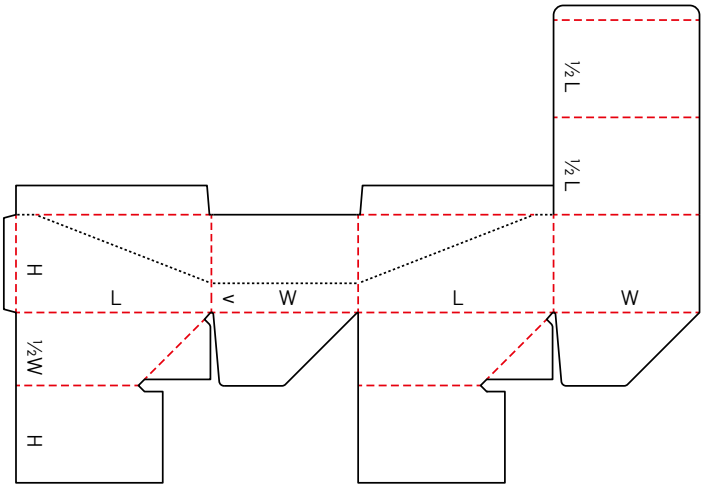

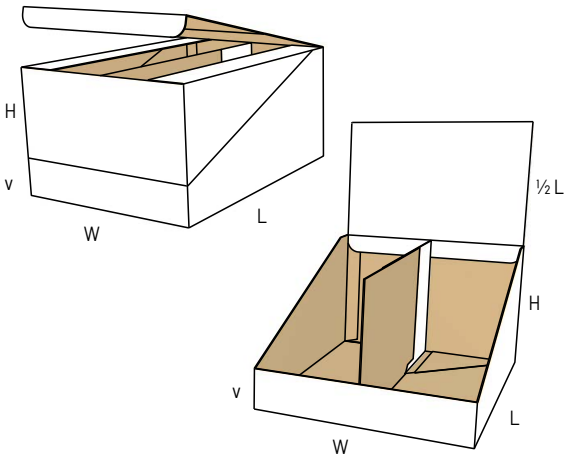

0717 M

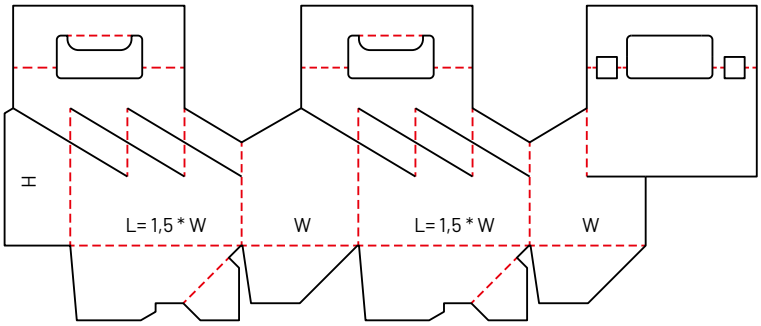

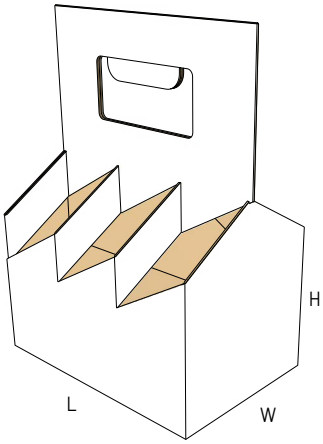

© 2022, 12th Edition - All rights reserved.

0718 M

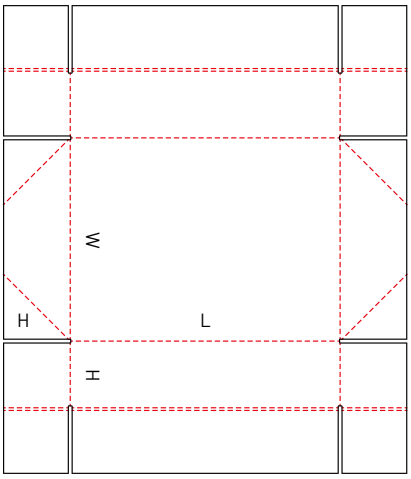

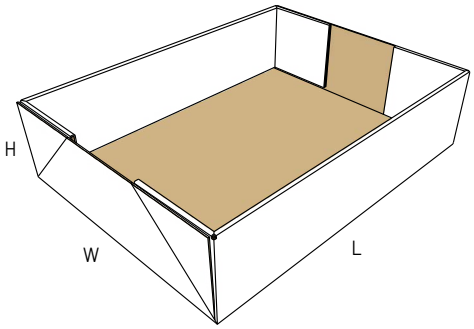

0719 M

NEW

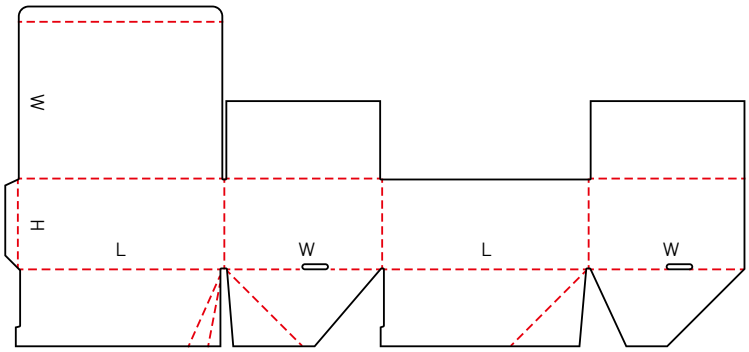

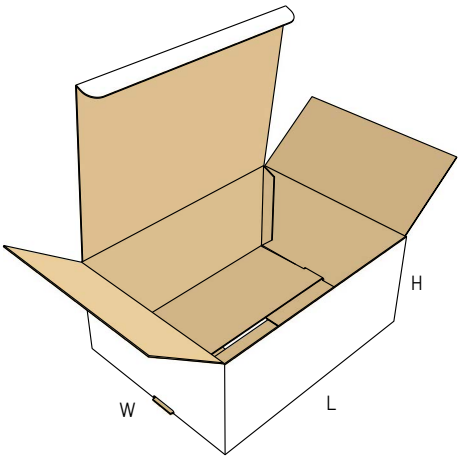

0720 M

NEW

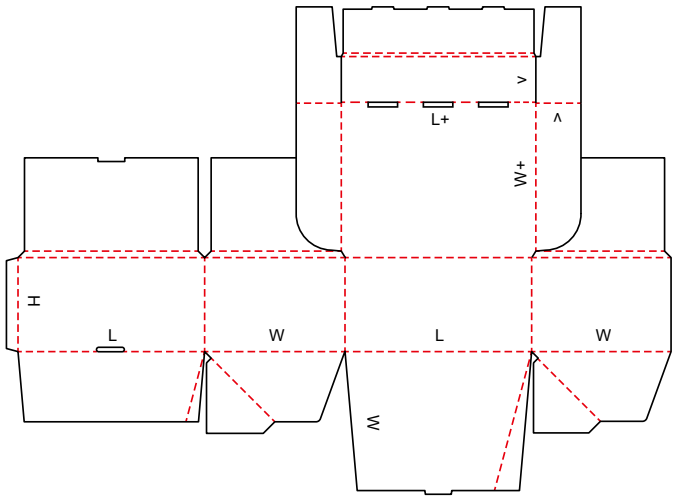

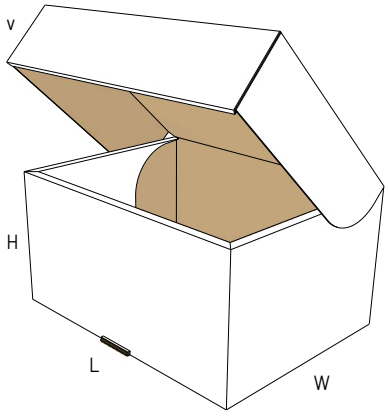

© 2022, 12th Edition - All rights reserved.

0721 M

NEW

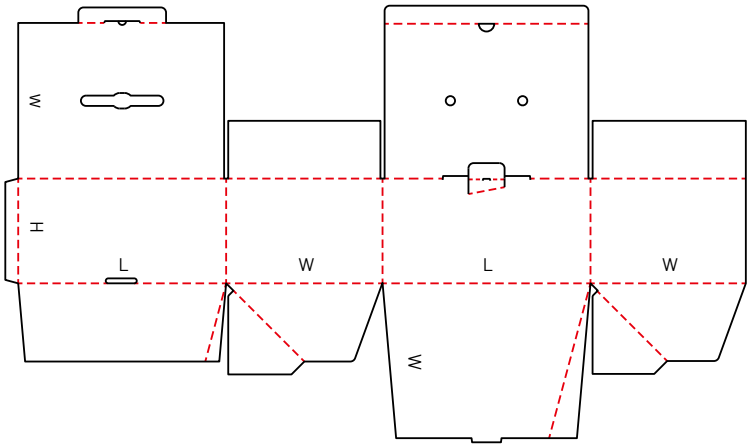

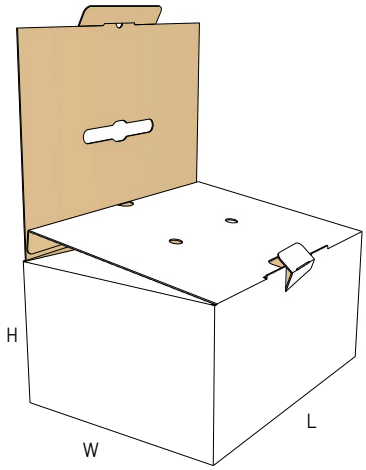

0722 M

NEW

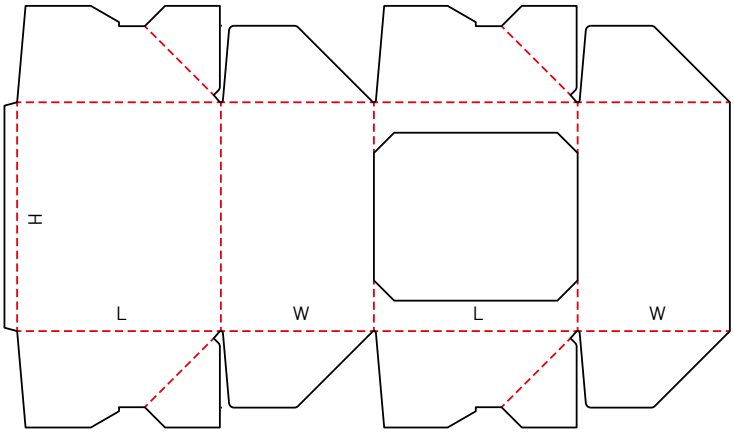

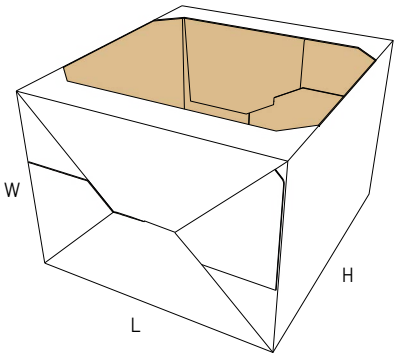

0723 M

NEW

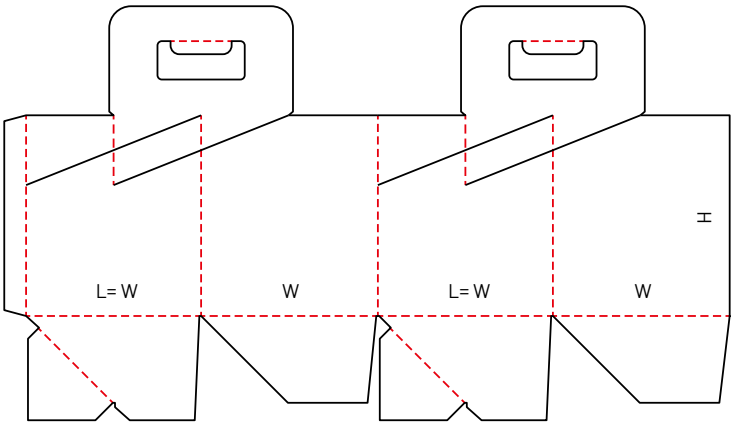

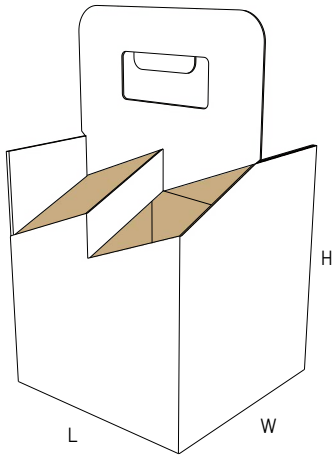

© 2022, 12th Edition - All rights reserved.

0724 M

NEW

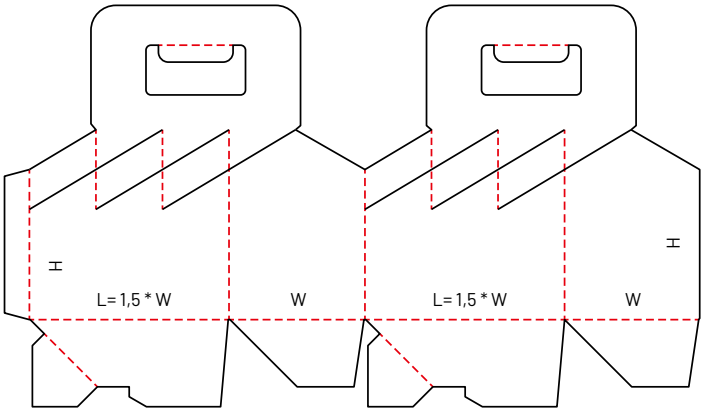

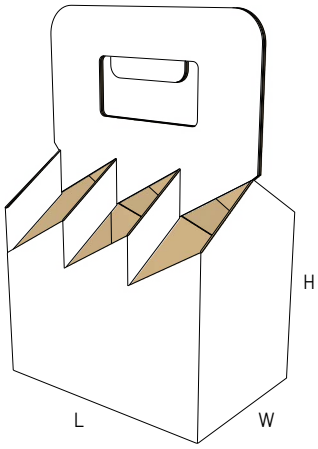

0725 M

NEW

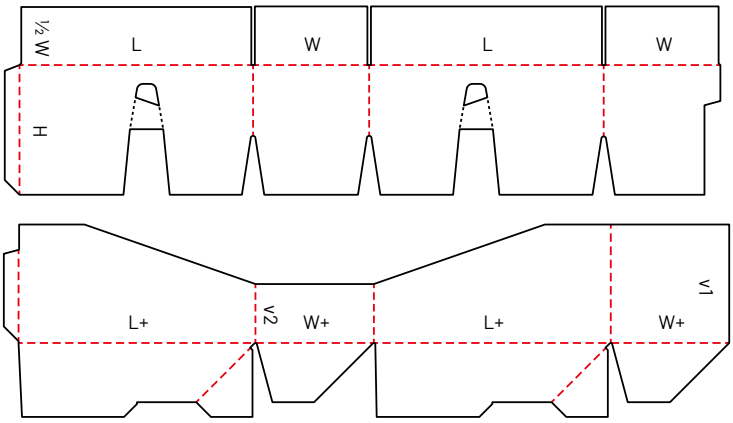

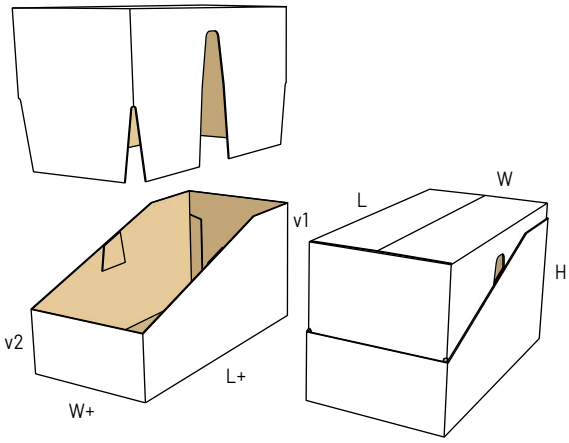

0726 M

NEW

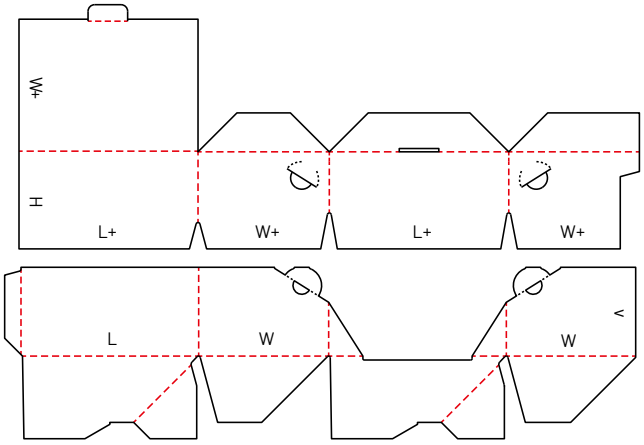

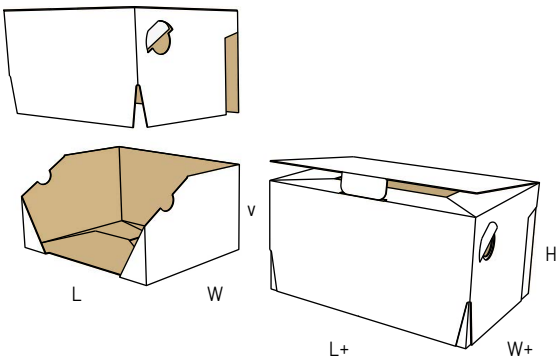

© 2022, 12th Edition - All rights reserved.

0727 A

NEW

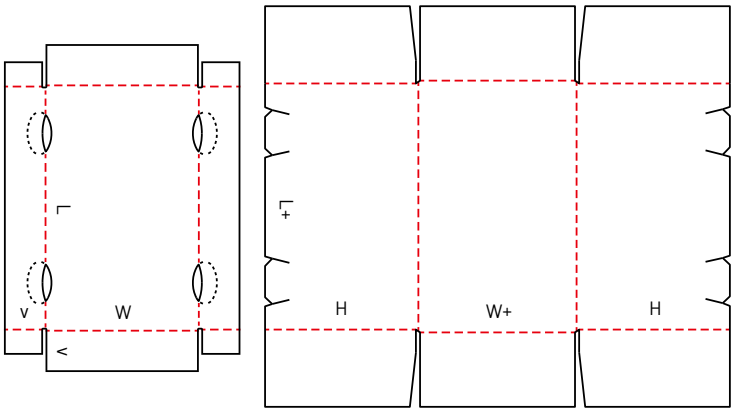

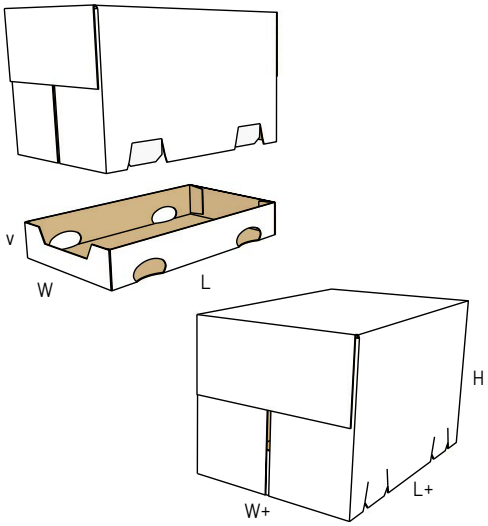

0728 M

NEW

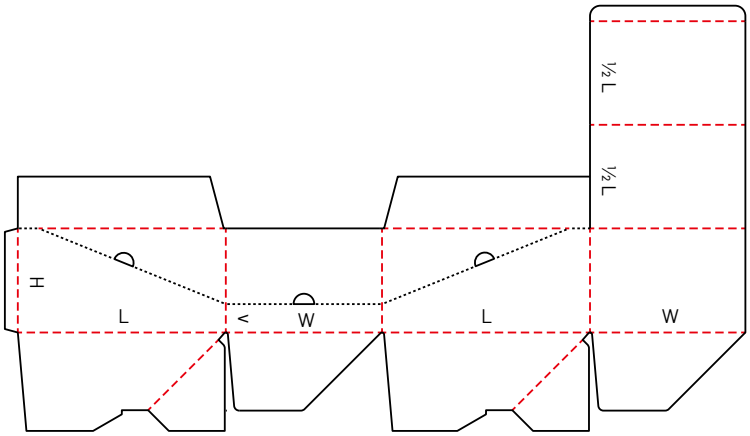

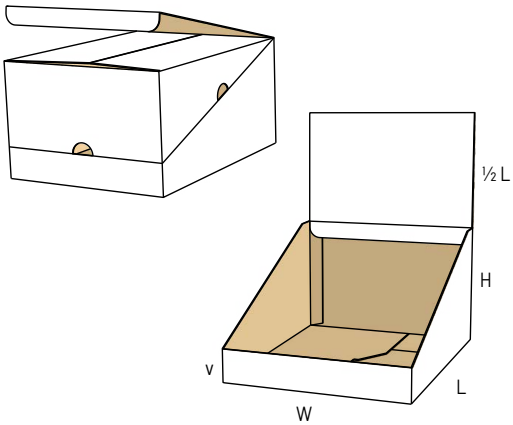

0730 M

NEW

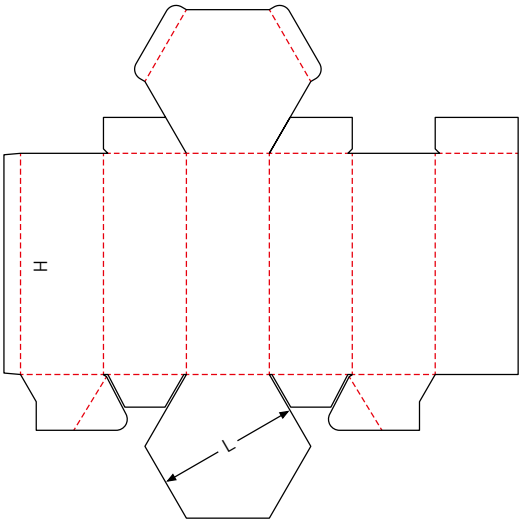

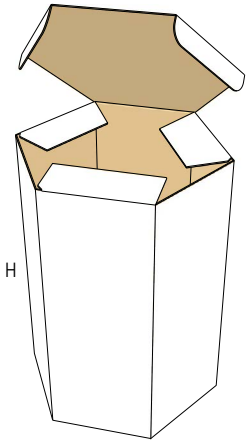

© 2022, 12th Edition - All rights reserved.

0740 M

NEW

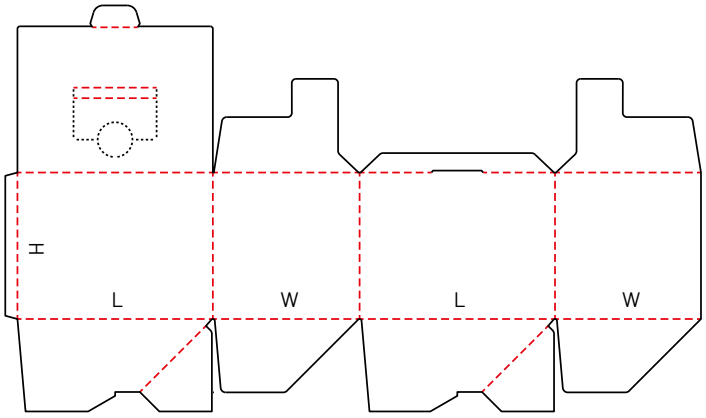

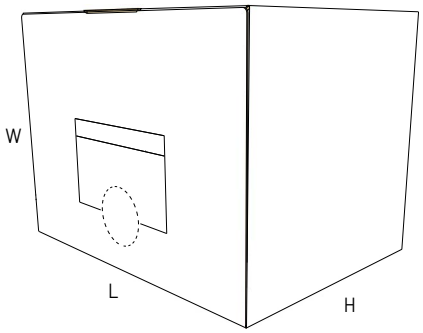

0747 M

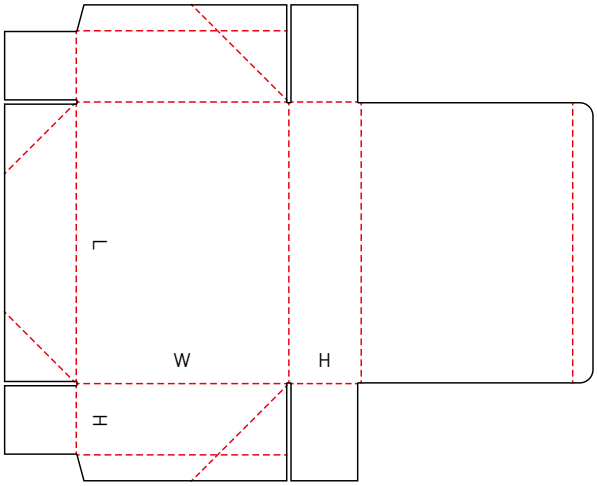

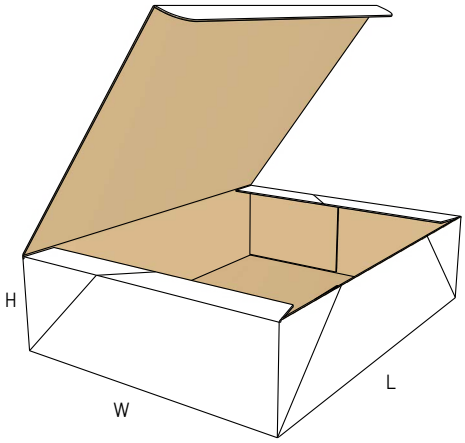

0748 M

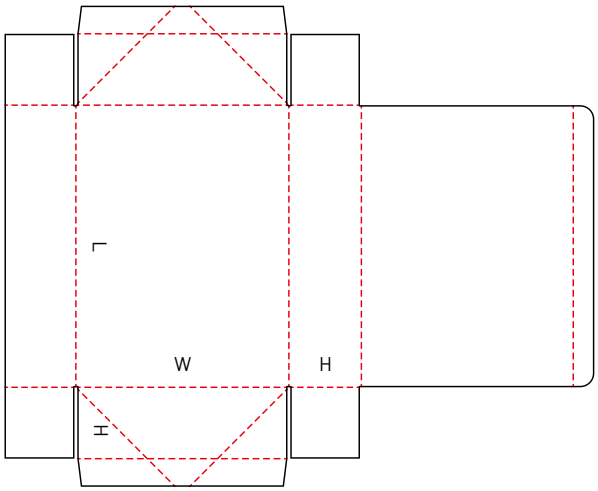

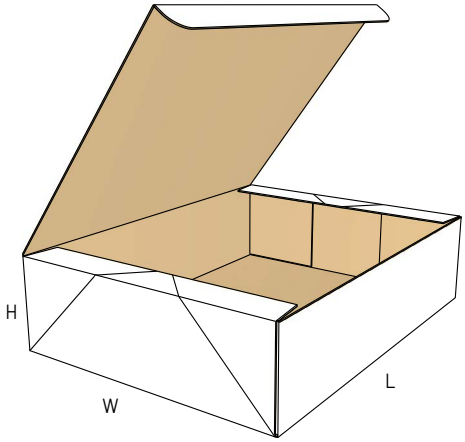

© 2022, 12th Edition - All rights reserved.

0751 M

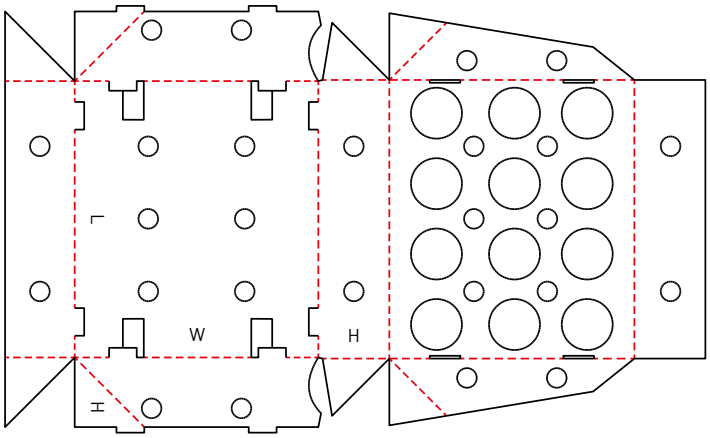

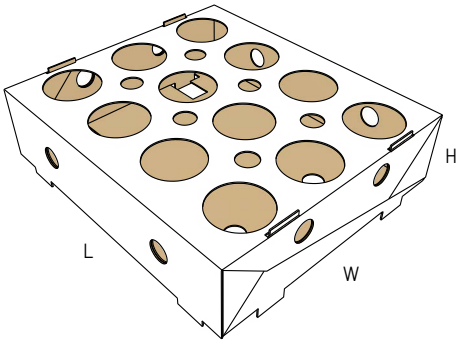

0752 M

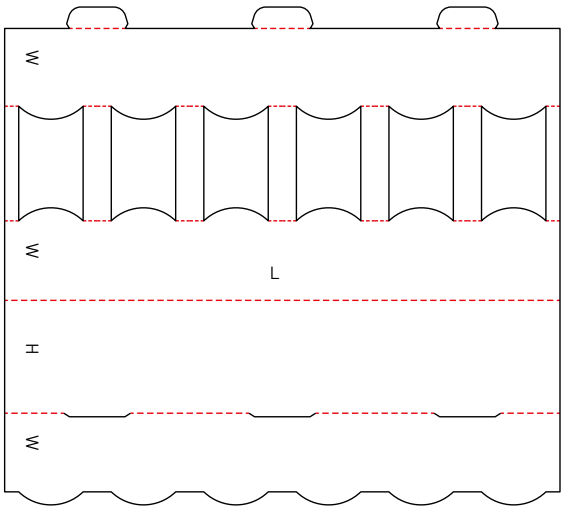

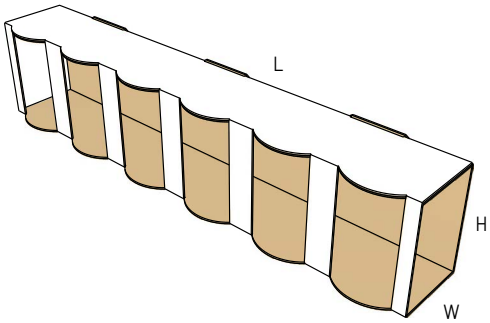

0759 M

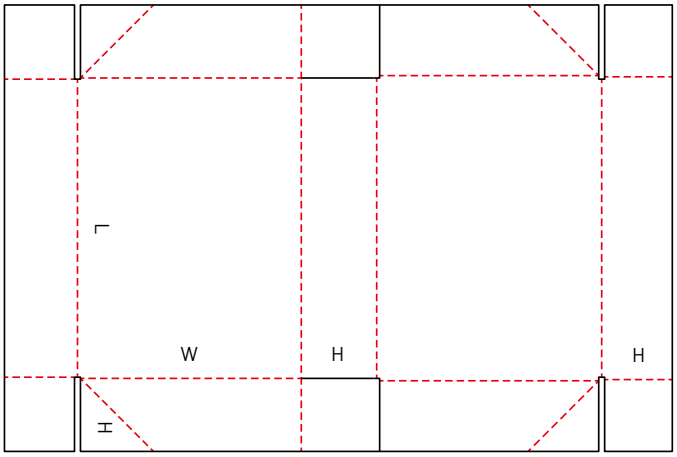

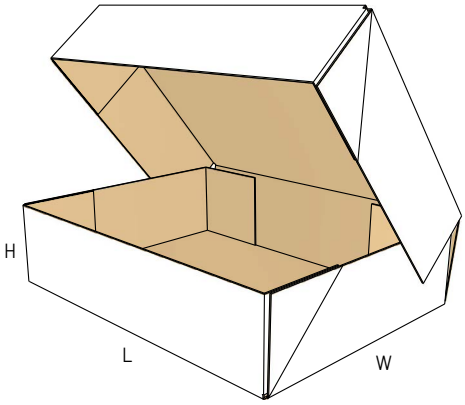

© 2022, 12th Edition - All rights reserved.

0761 M

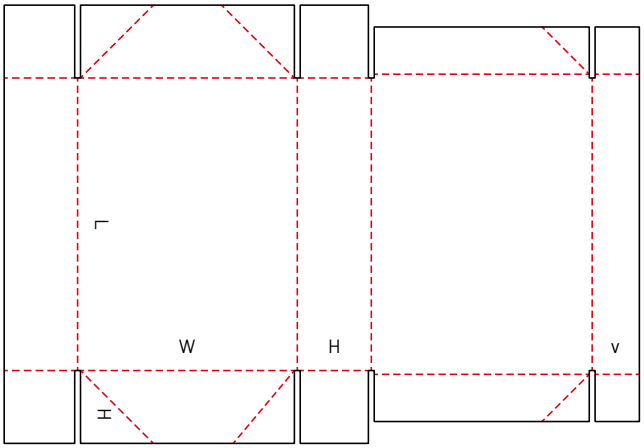

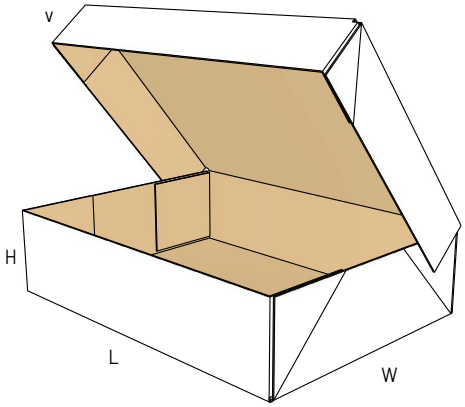

0770 M

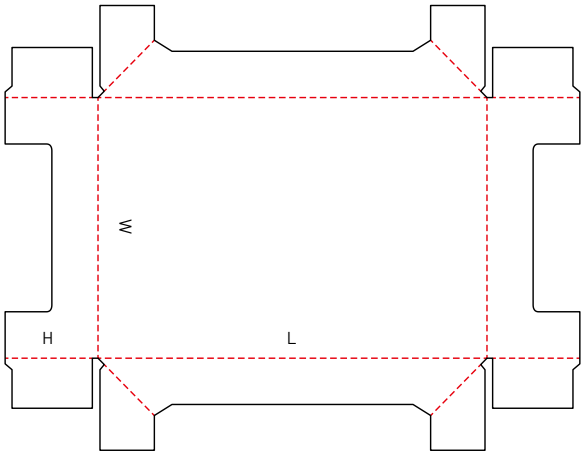

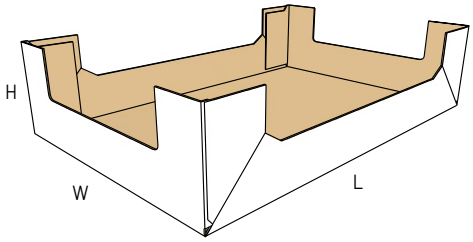

0771 M

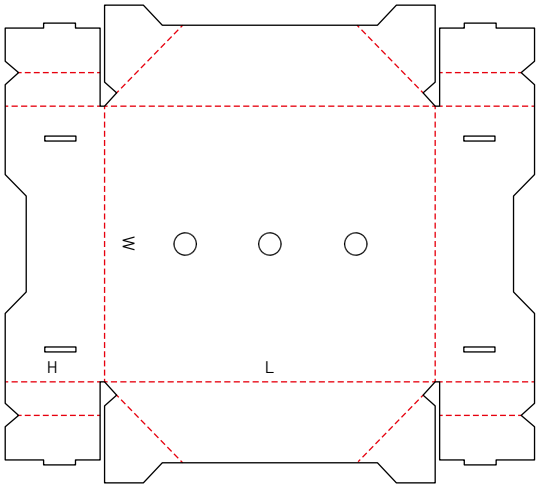

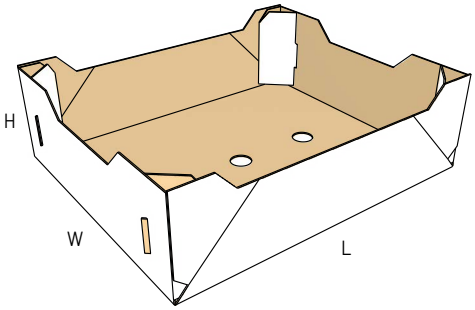

© 2022, 12th Edition - All rights reserved.

0772 M

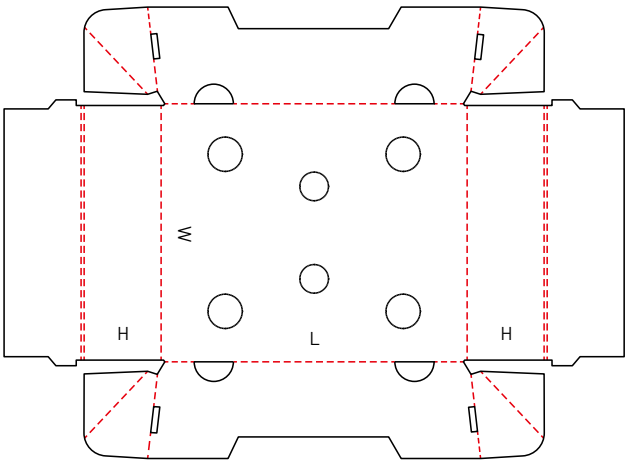

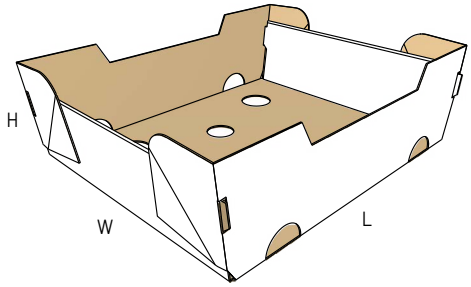

0773 M

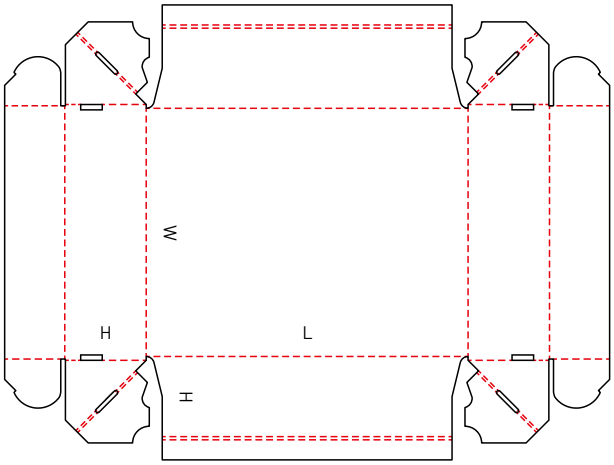

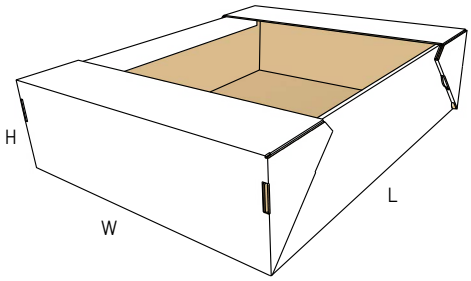

0774 M

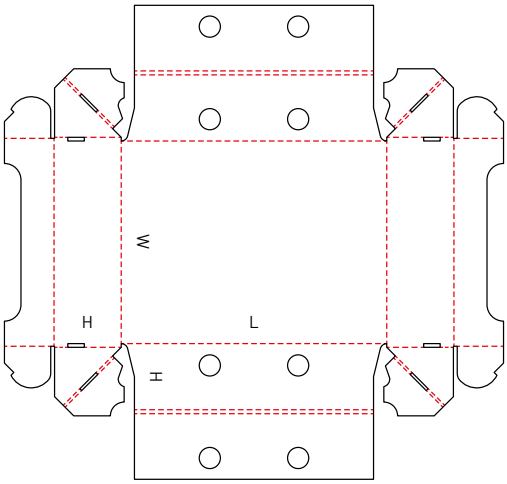

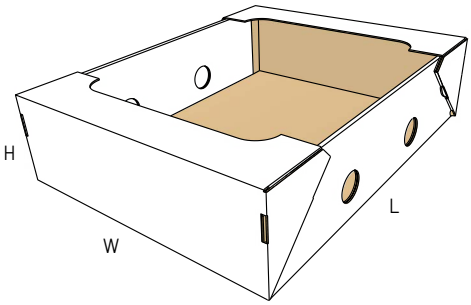

© 2022, 12th Edition - All rights reserved.

RETAIL AND E-COMMERCE PACKAGING

Retail and e-commerce packaging category shows the typical styles used for Point of Sale (POS) displays and trays as well as styles for the online trade.

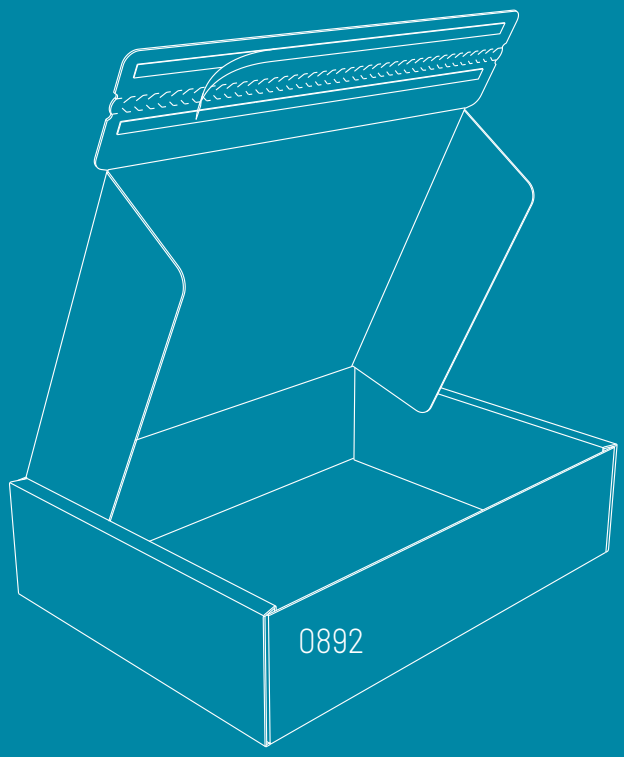

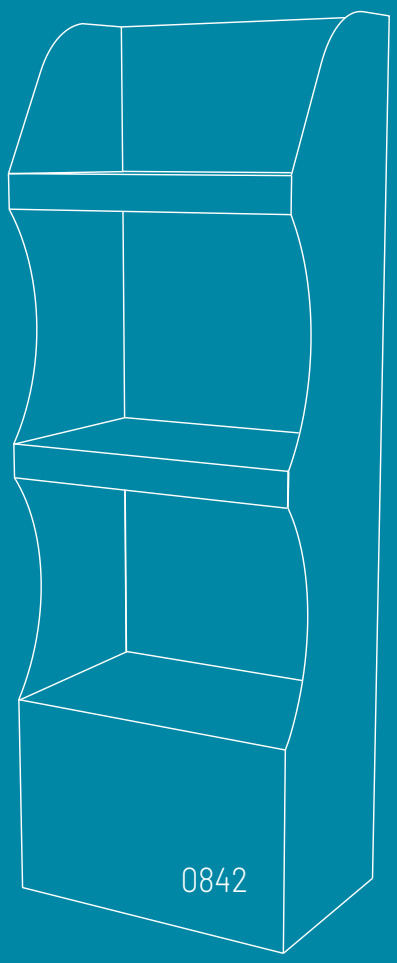

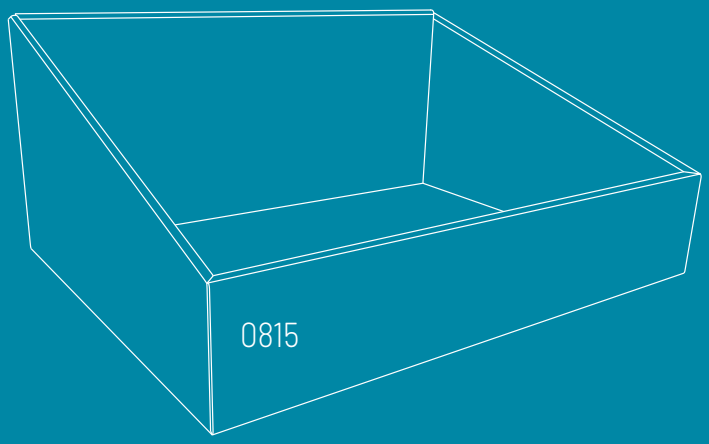

0801 M
NEW

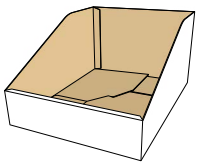

0802 M/A
NEW

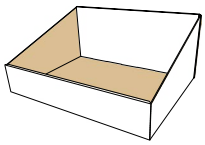

0803 M
NEW

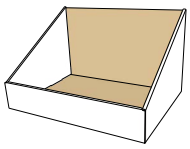

0804 M
NEW

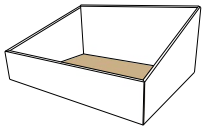

0808 M
NEW

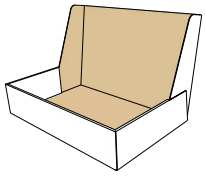

0809 M
NEW

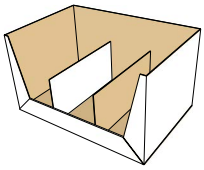

0815 M
NEW

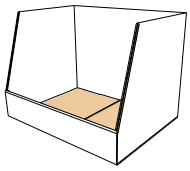

0816 M
NEW

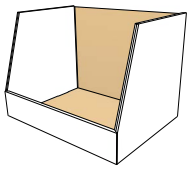

0817 M
NEW

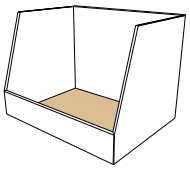

0818 M
NEW

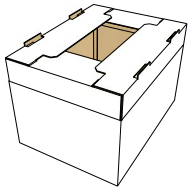

0819 M
NEW

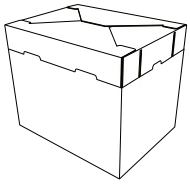

0825 M
NEW

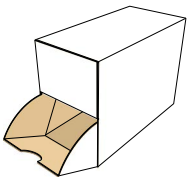

0826 M
NEW

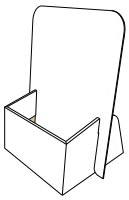

0830 M
NEW

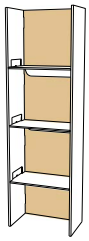

0831 M
NEW

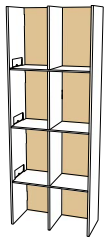

0832 M
NEW

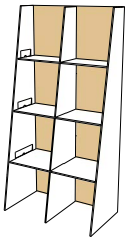

0833 M
NEW

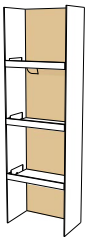

0834 M
NEW

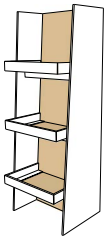

0840 M
NEW

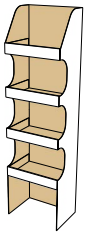

0841 M
NEW

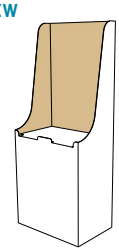

0842 M
NEW

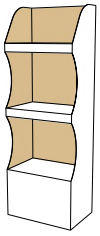

0843 M
NEW

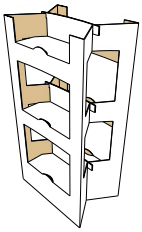

0845 M
NEW

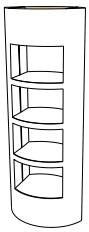

0846 M
NEW

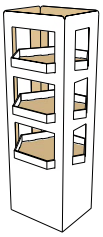

0847 M
NEW

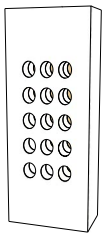

0848 M
NEW

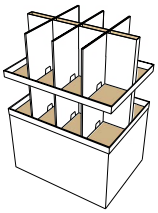

0849 M
NEW

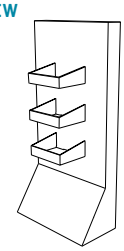

0850 M
NEW

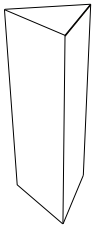

0851 M
NEW

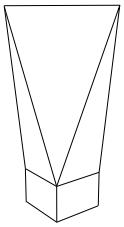

0852 M
NEW

© 2022, 12th Edition - All rights reserved.

0853 M
NEW

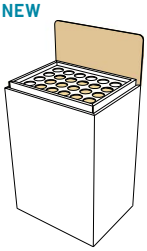

0854 M
NEW

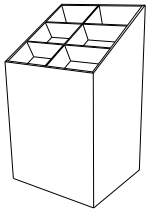

0858 M
NEW

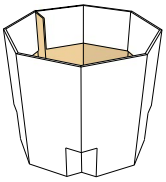

0859 M
NEW

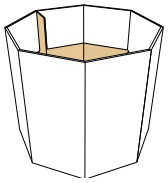

0860 M
NEW

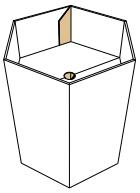

0861 M
NEW

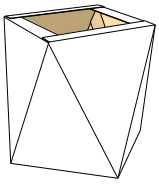

0865 M
NEW

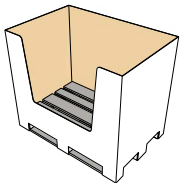

0866 M
NEW

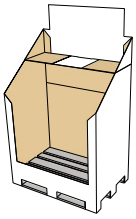

0870 M
NEW

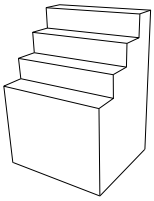

0871 M
NEW

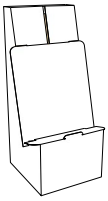

0872 M
NEW

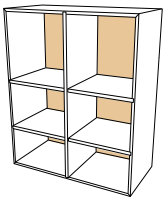

0873 M
NEW

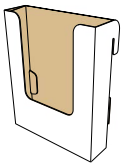

0874 M
NEW

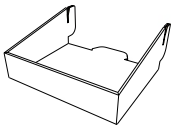

0880 M
NEW

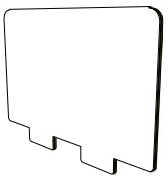

0881 M
NEW

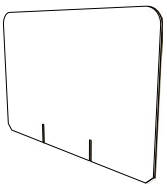

0882 M
NEW

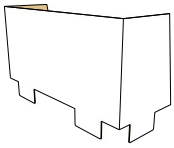

0885 M
NEW

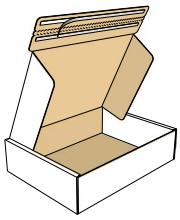

0886 M
NEW

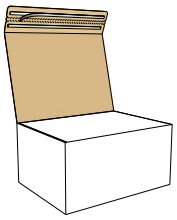

0887 M
NEW

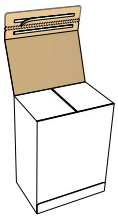

© 2022, 12th Edition - All rights reserved.

0801 M

NEW

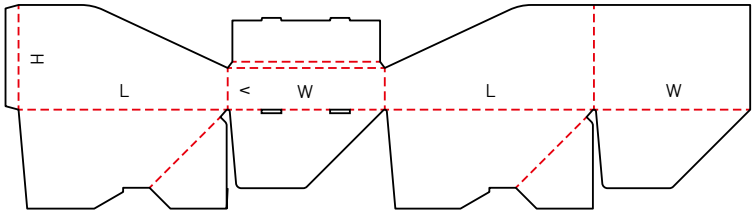

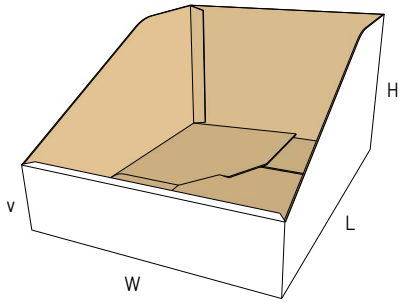

0802 M/A

NEW

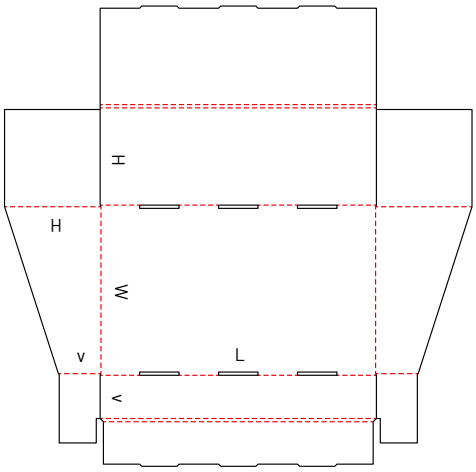

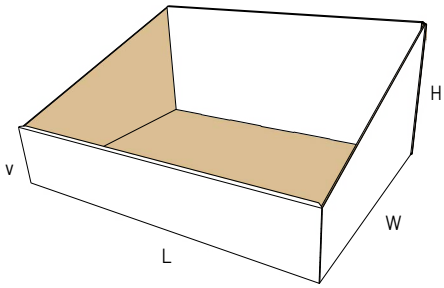

0803 M

NEW

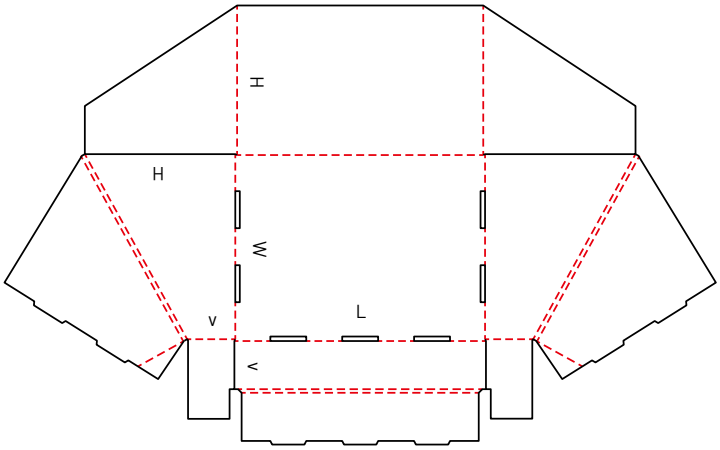

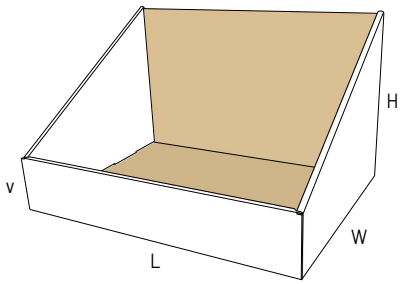

© 2022, 12th Edition - All rights reserved.

0804 M

NEW

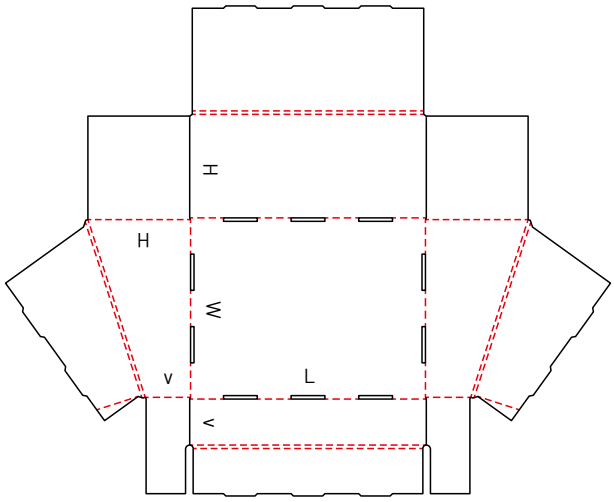

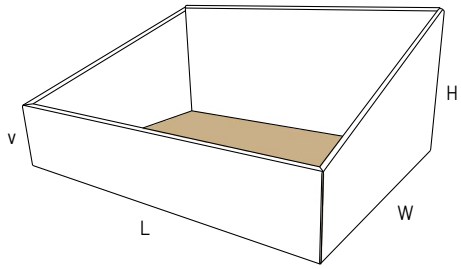

0808 M

NEW

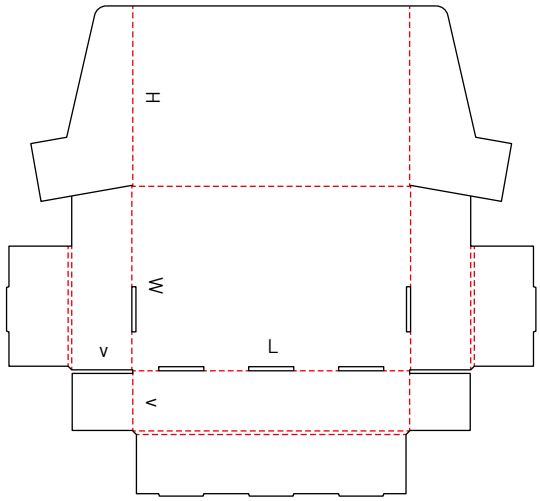

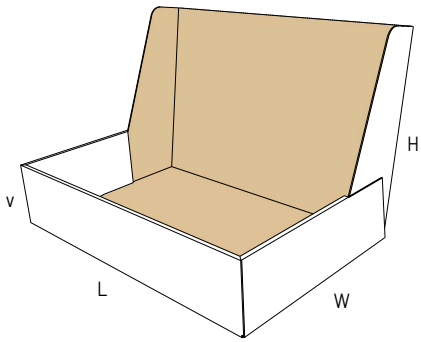

0809 M

NEW

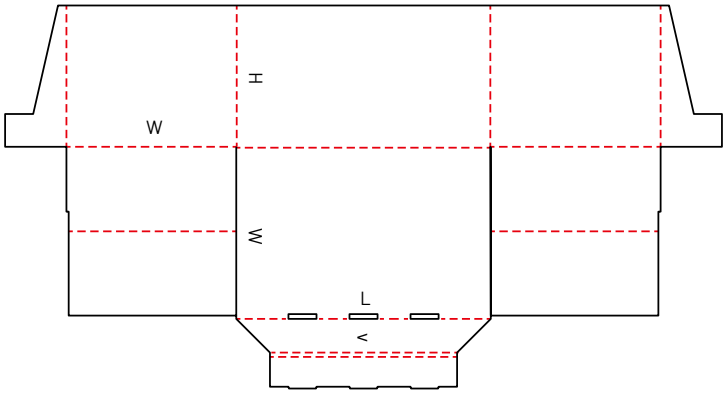

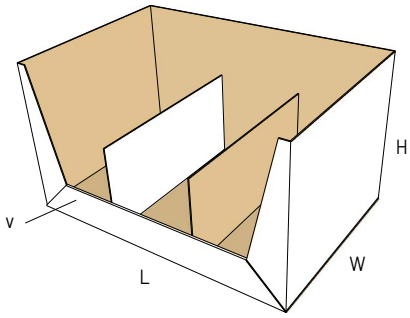

© 2022, 12th Edition - All rights reserved.

0815 M

NEW

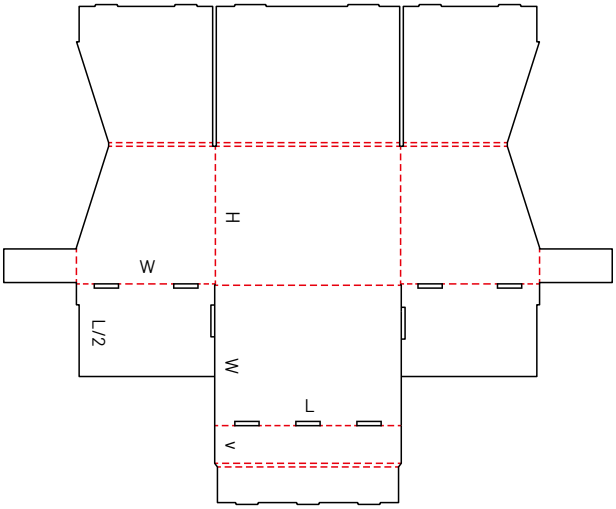

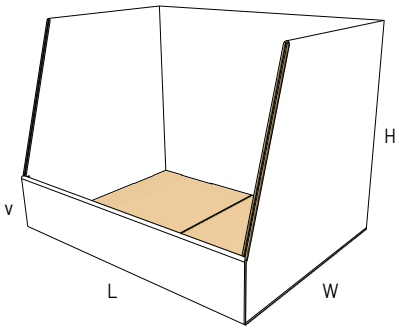

0816 M

NEW

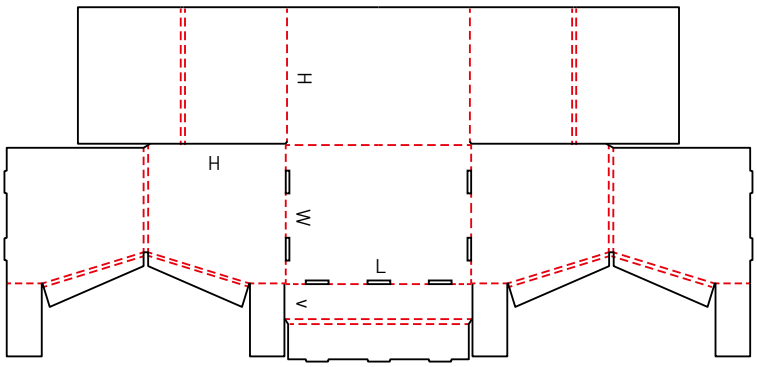

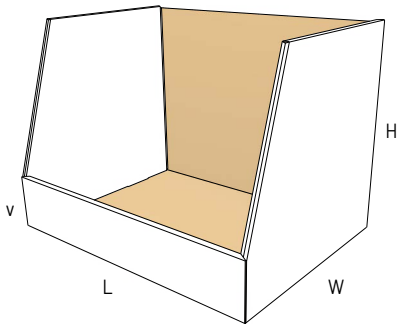

0817 M

NEW

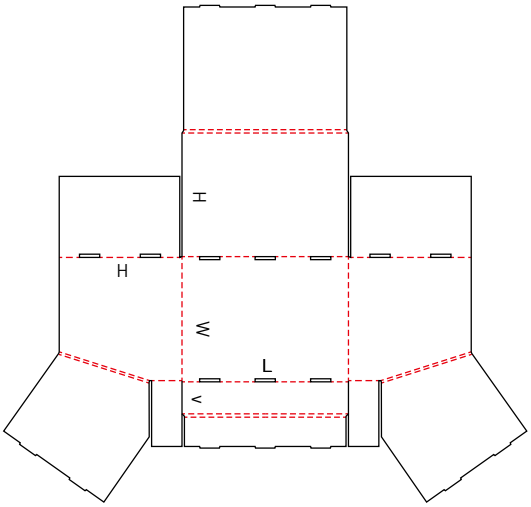

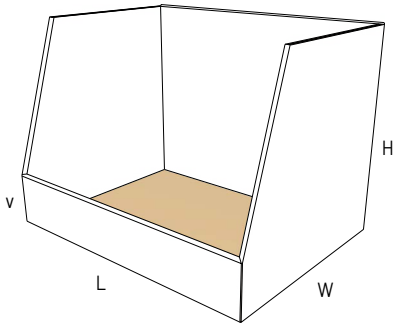

© 2022, 12th Edition - All rights reserved.

0818 M

NEW

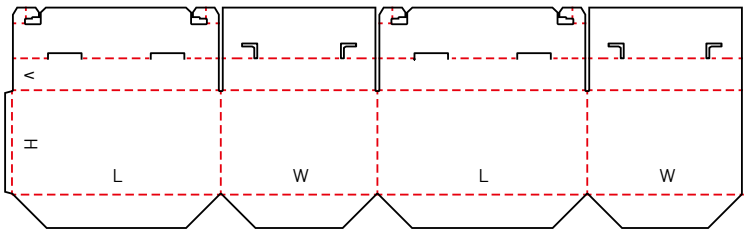

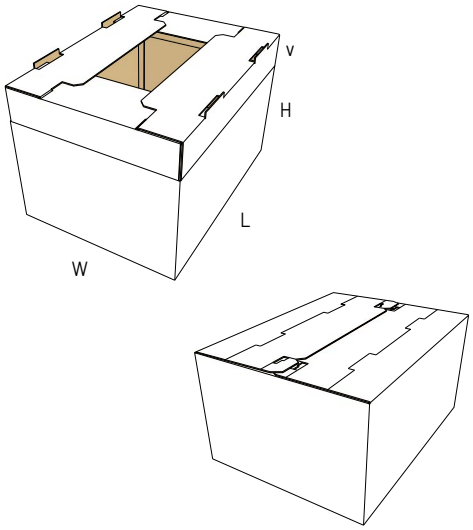

0819 M

NEW

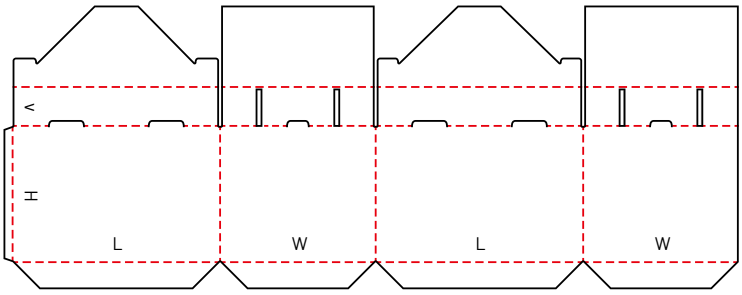

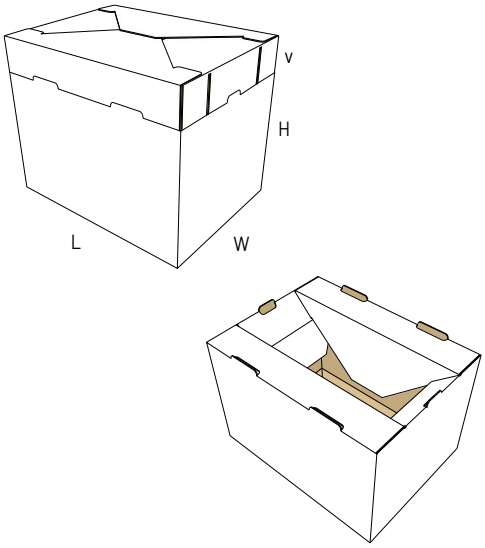

0825 M

NEW

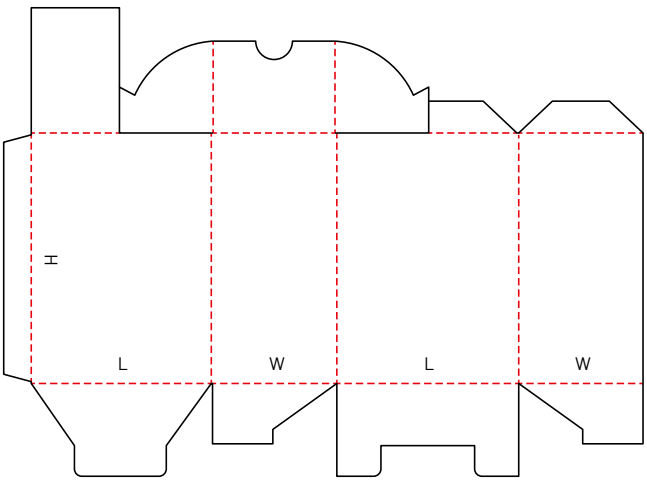

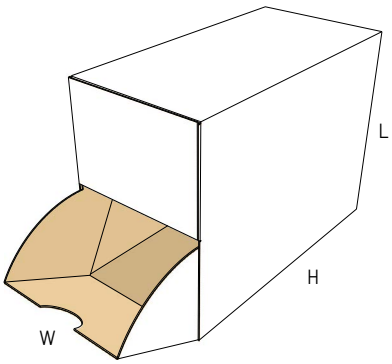

© 2022, 12th Edition - All rights reserved.

0826 M

NEW

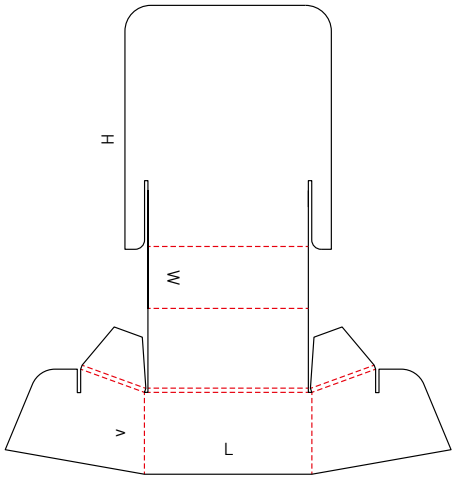

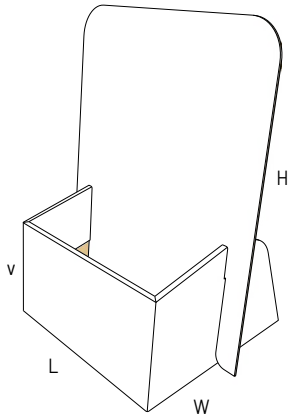

0830 M

NEW

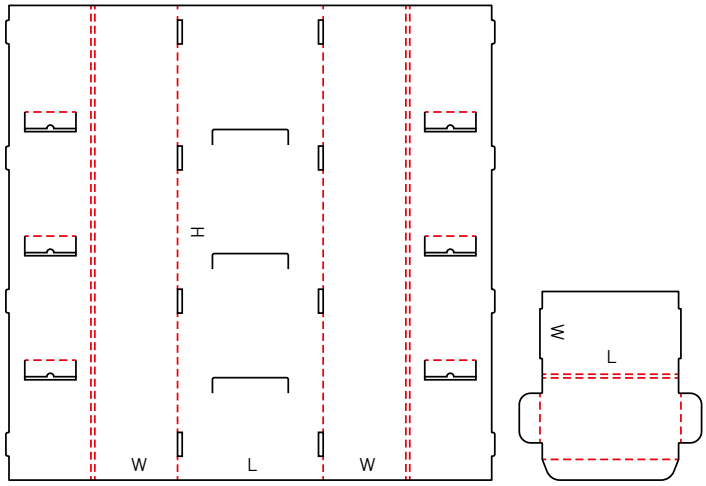

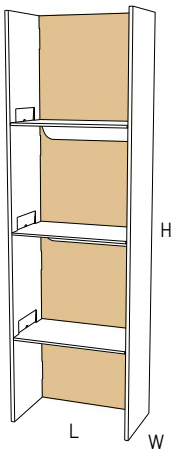

0831 M

NEW

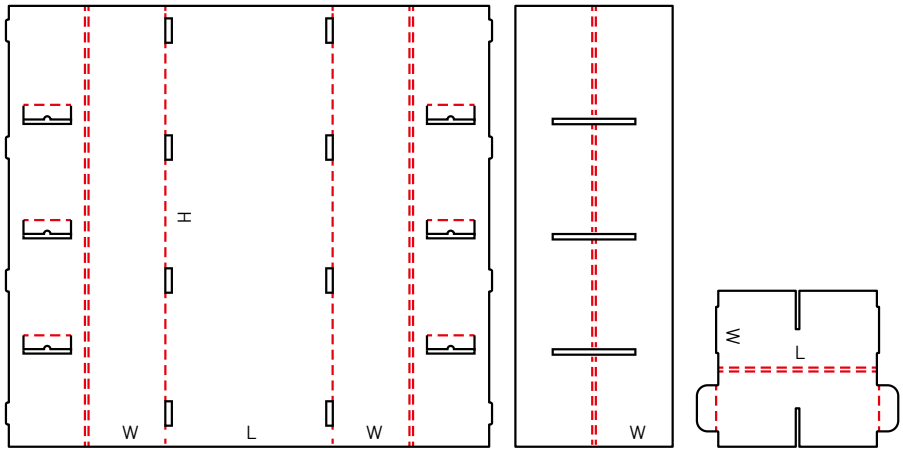

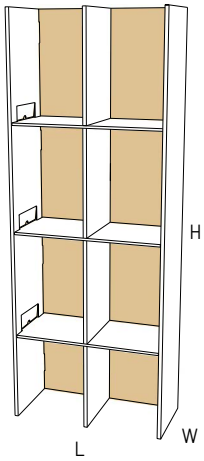

© 2022, 12th Edition - All rights reserved.

0832 M

NEW

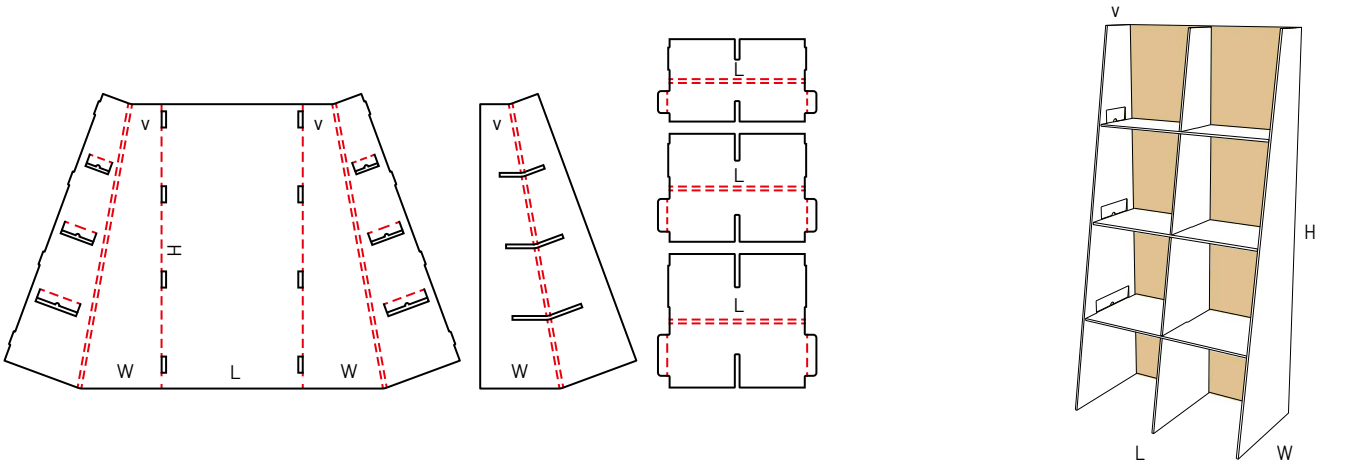

0833 M

NEW

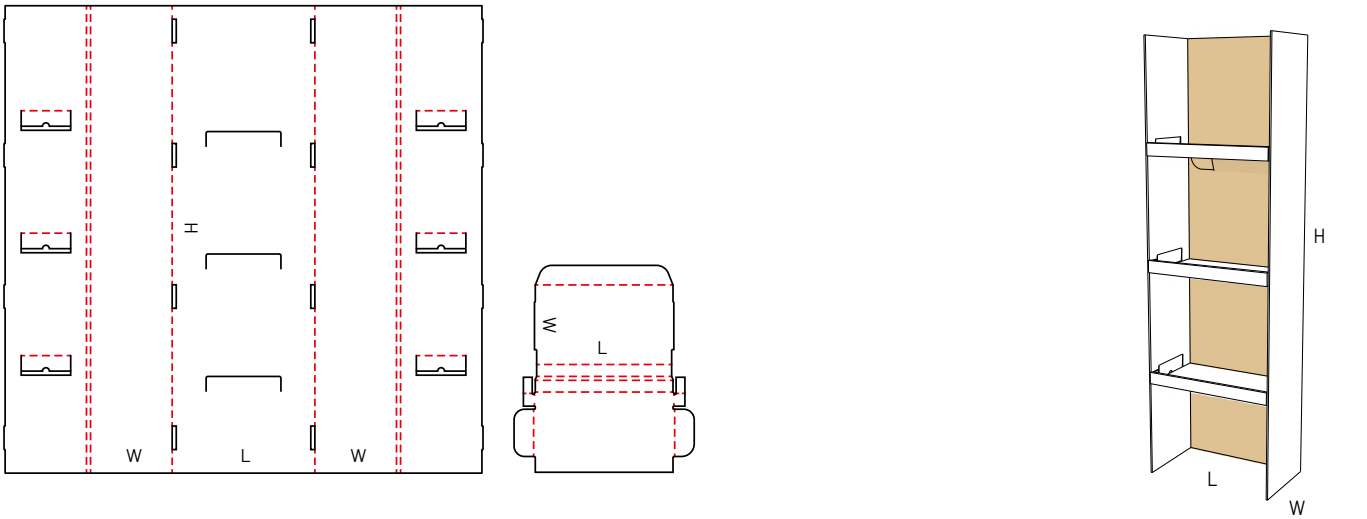

0834 M

NEW

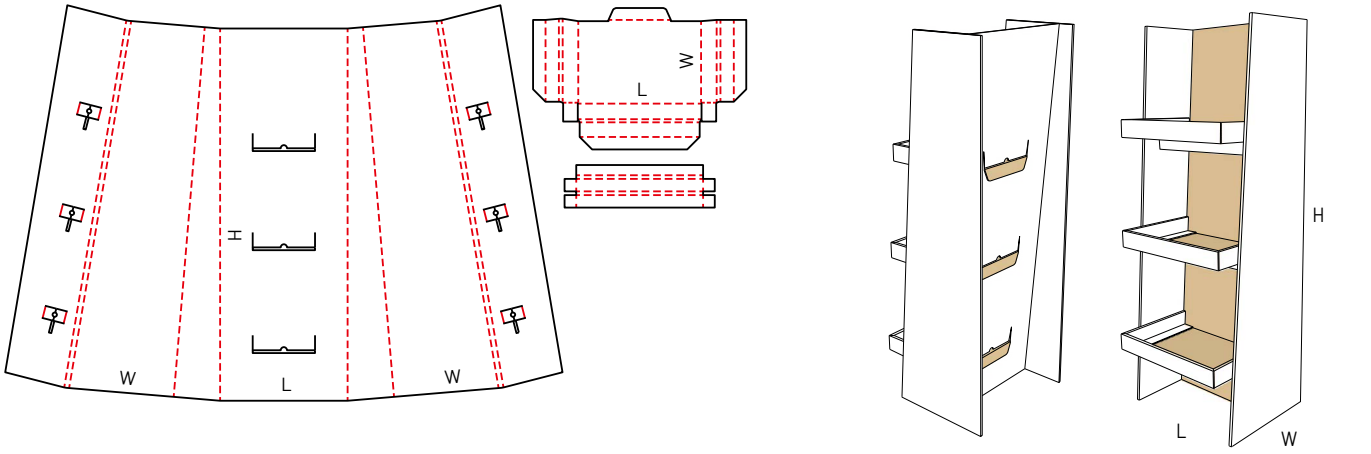

© 2022, 12th Edition - All rights reserved.

0840 M

NEW

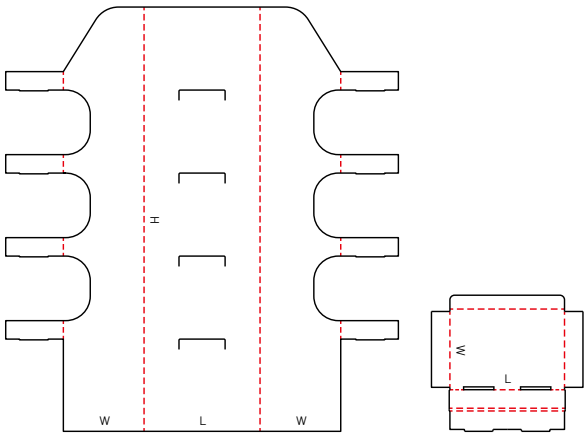

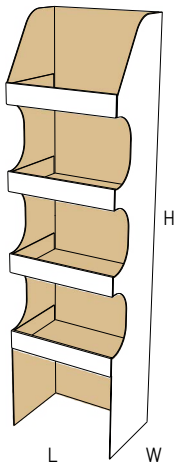

0841 M

NEW

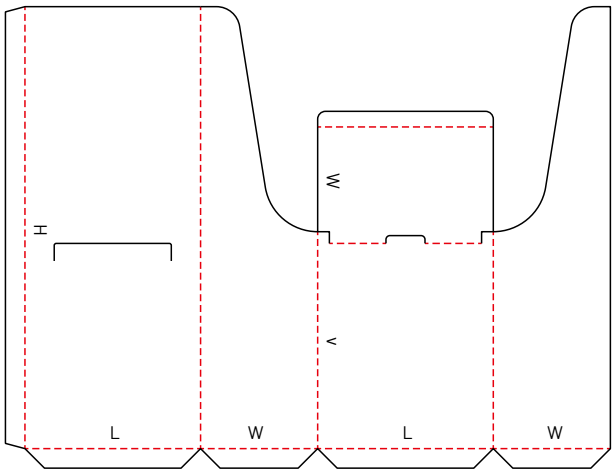

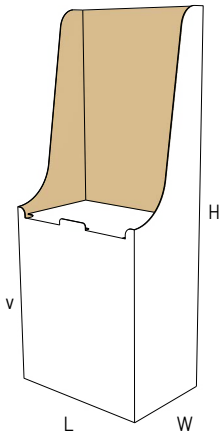

0842 M

NEW

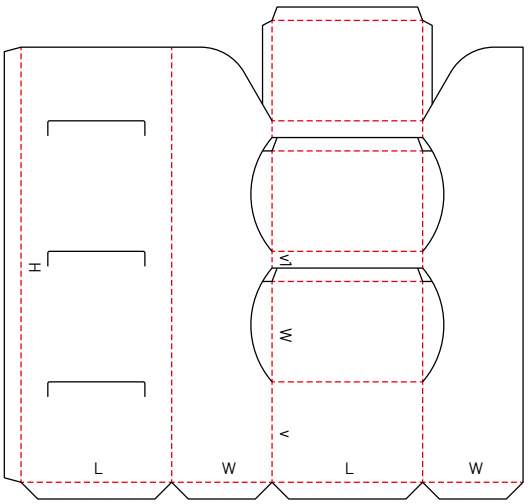

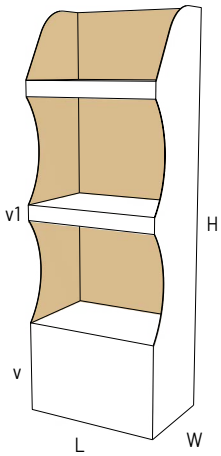

© 2022, 12th Edition - All rights reserved.

0843 M

NEW

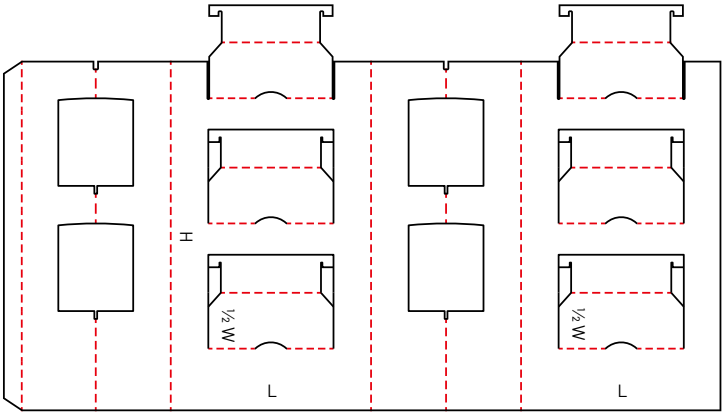

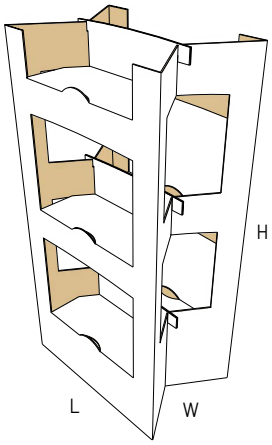

0845 M

NEW

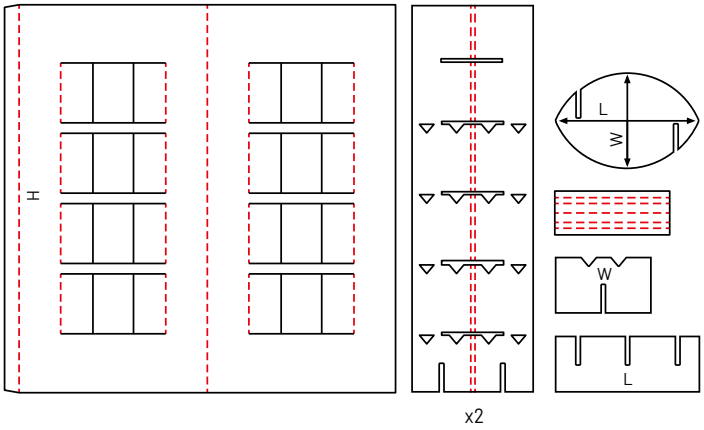

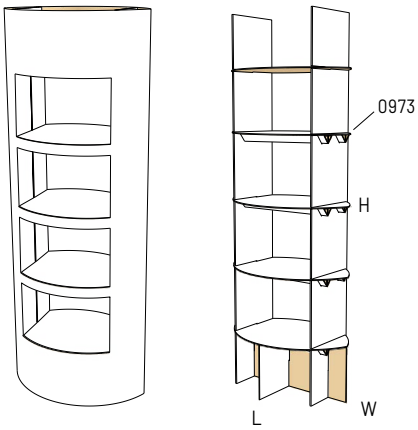

0846 M

NEW

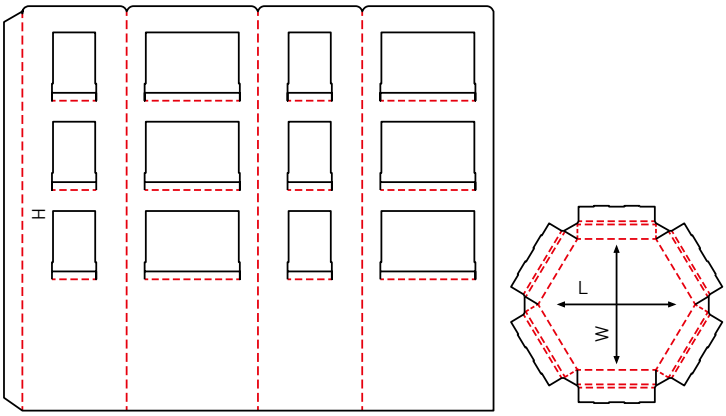

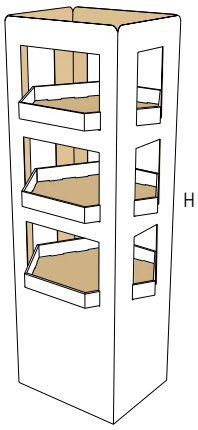

© 2022, 12th Edition - All rights reserved.

0847 M

NEW

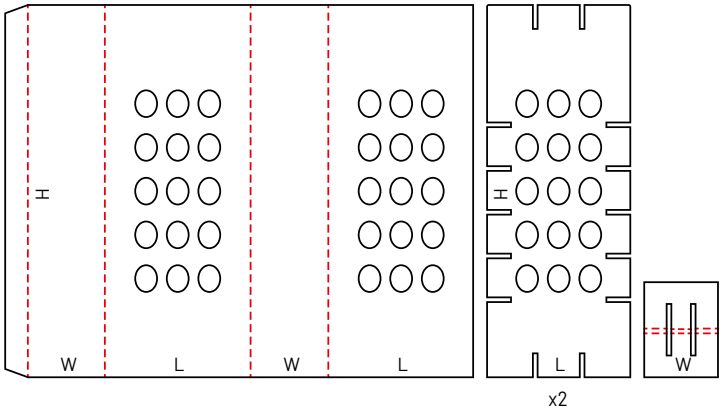

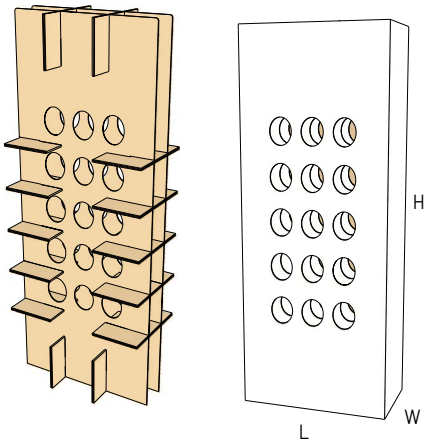

0848 M

NEW

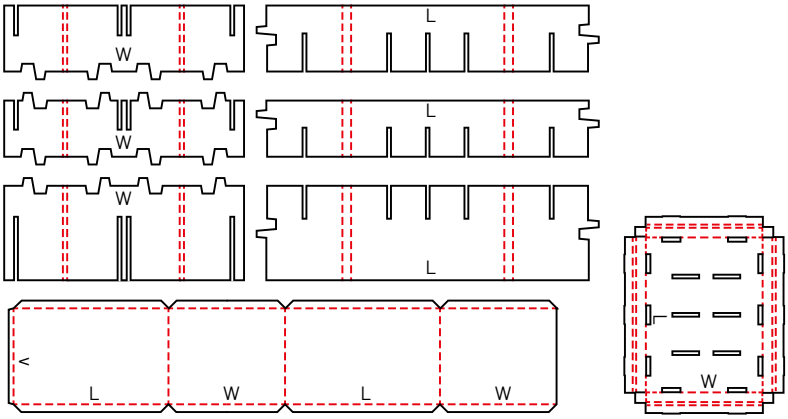

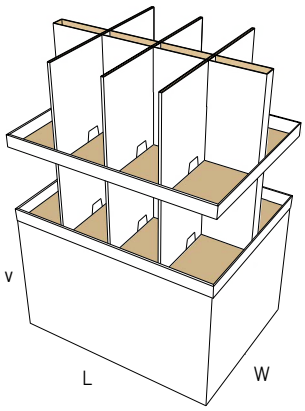

0849 M

NEW

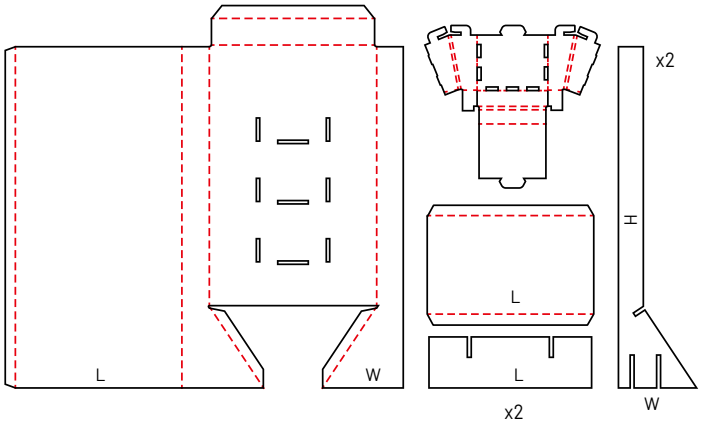

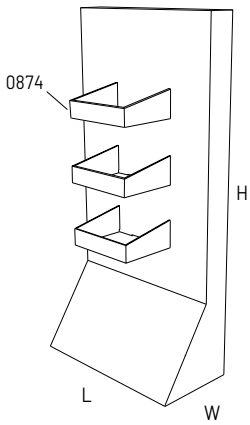

© 2022, 12th Edition - All rights reserved.

0850 M

NEW

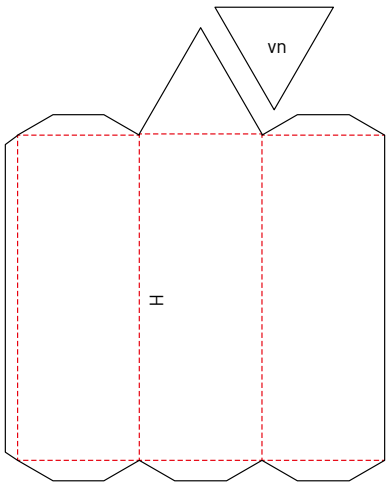

Design style could vary
with multiple number of sides (vn)

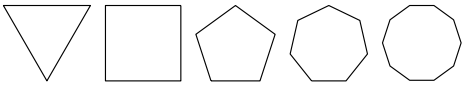

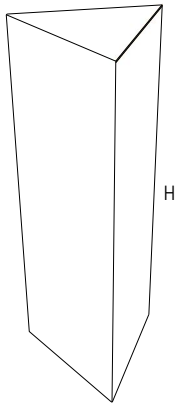

0851 M

NEW

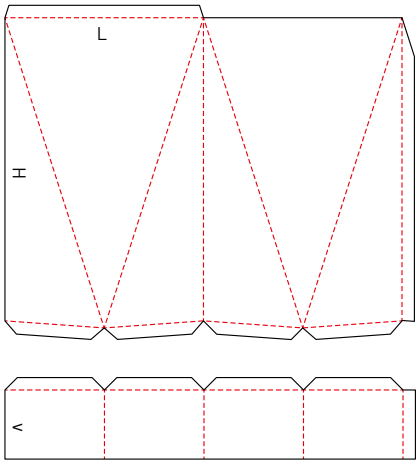

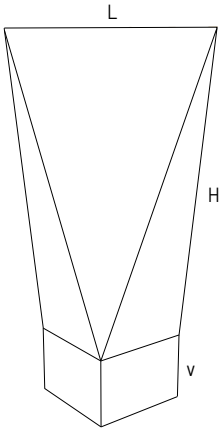

0852 M

NEW

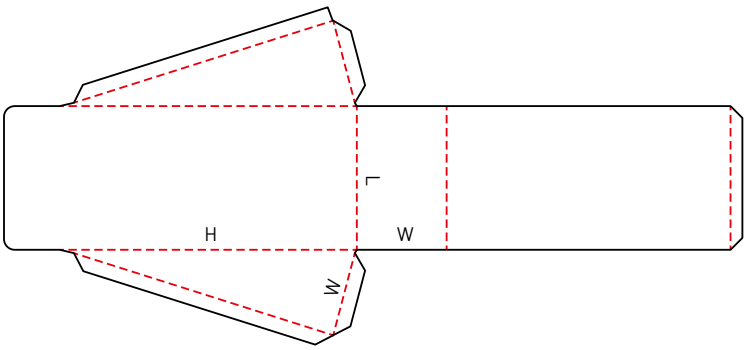

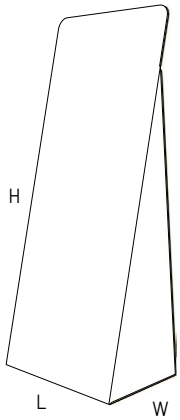

© 2022, 12th Edition - All rights reserved.

0853 M

NEW

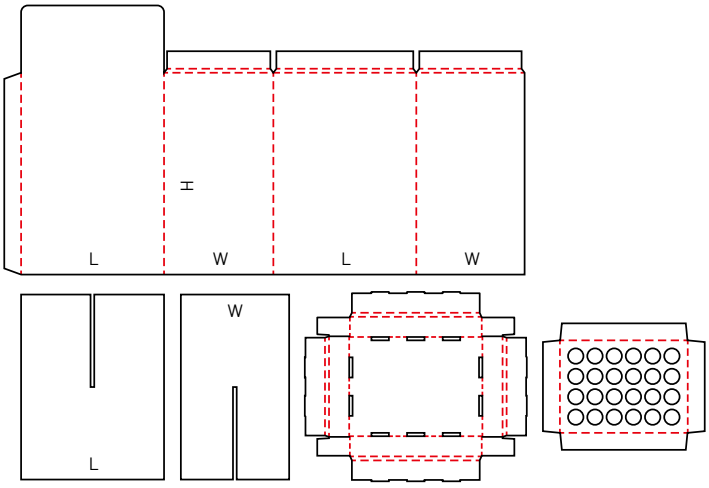

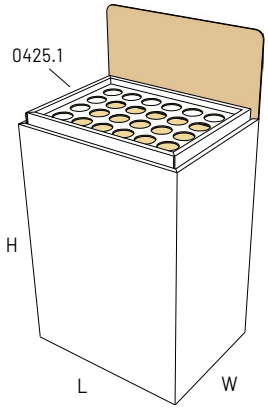

0854 M

NEW

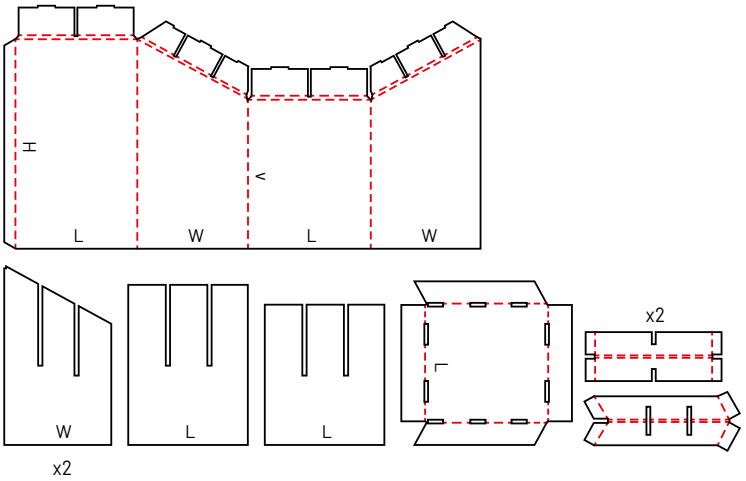

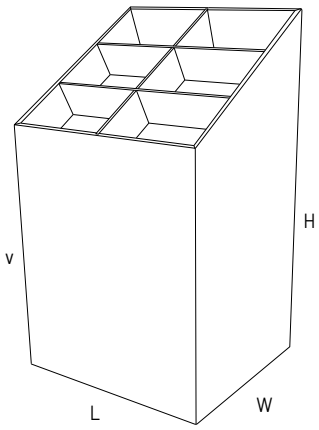

0858 M

NEW

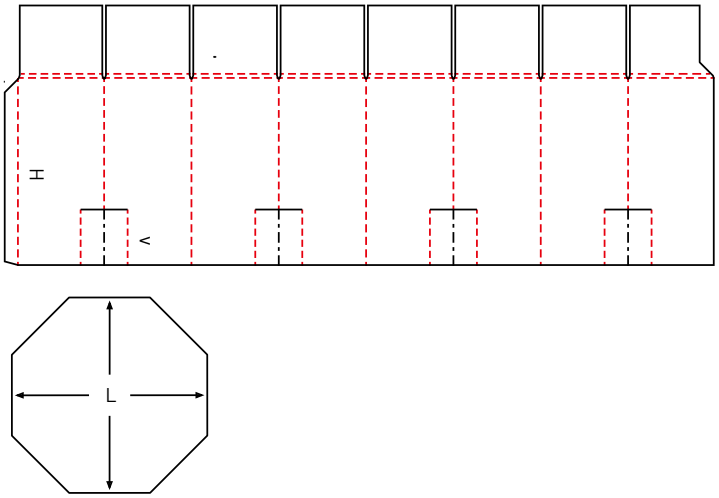

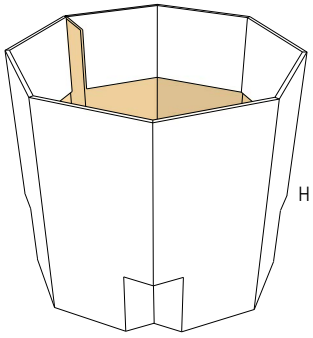

© 2022, 12th Edition - All rights reserved.

0859 M

NEW

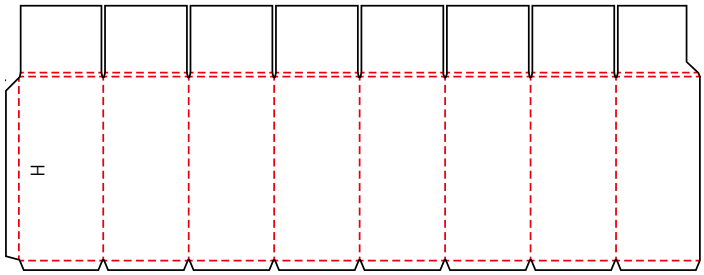

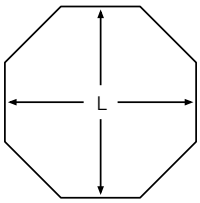

Design style could vary
with multiple number of sides (vn)

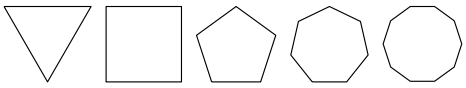

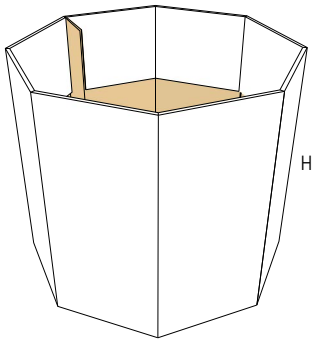

0860 M

NEW

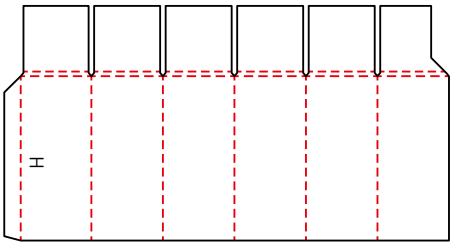

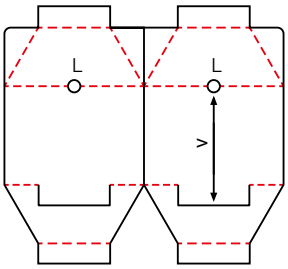

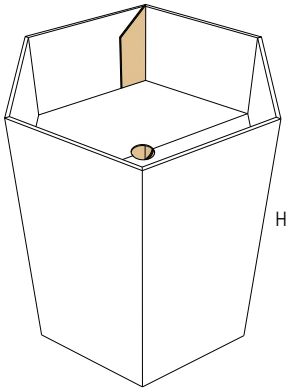

0861 M

NEW

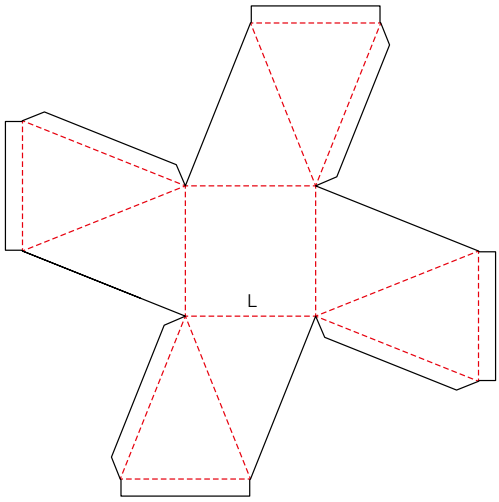

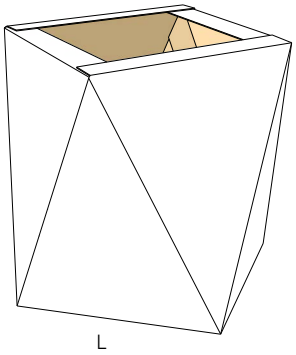

© 2022, 12th Edition - All rights reserved.

0865 M

NEW

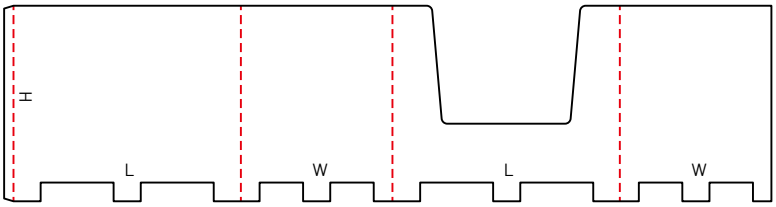

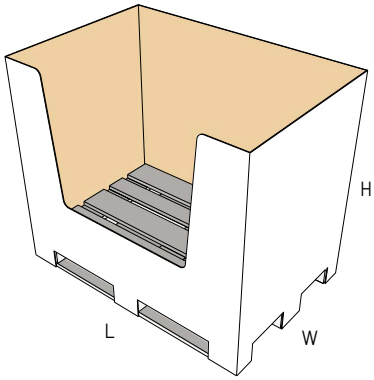

0866 M

NEW

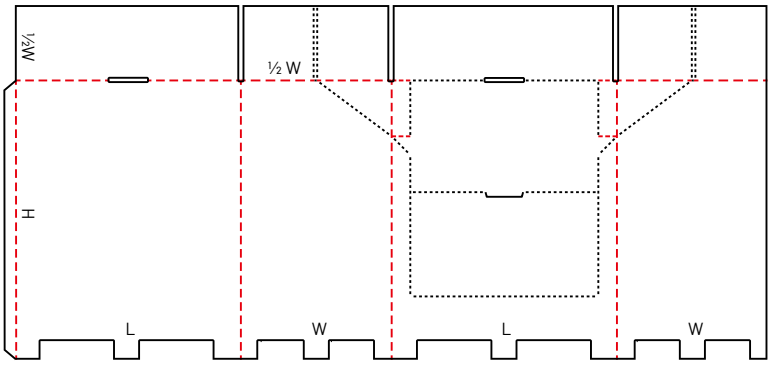

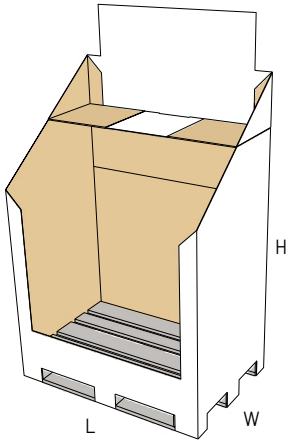

0870 M

NEW

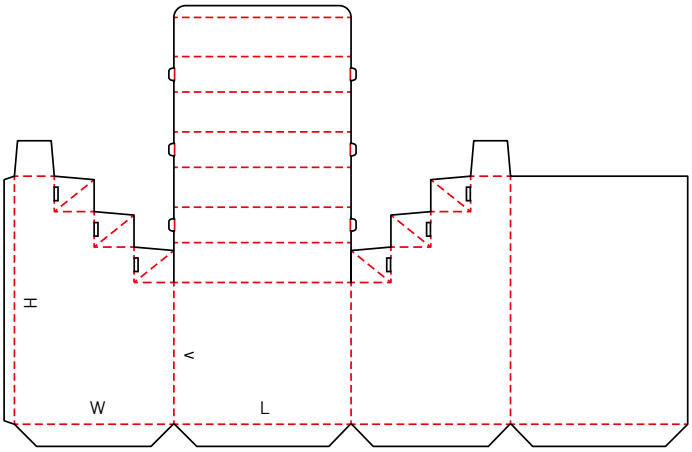

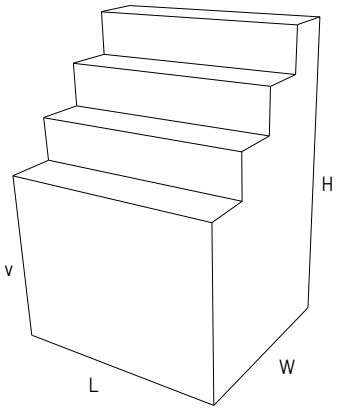

© 2022, 12th Edition - All rights reserved.

0871 M

NEW

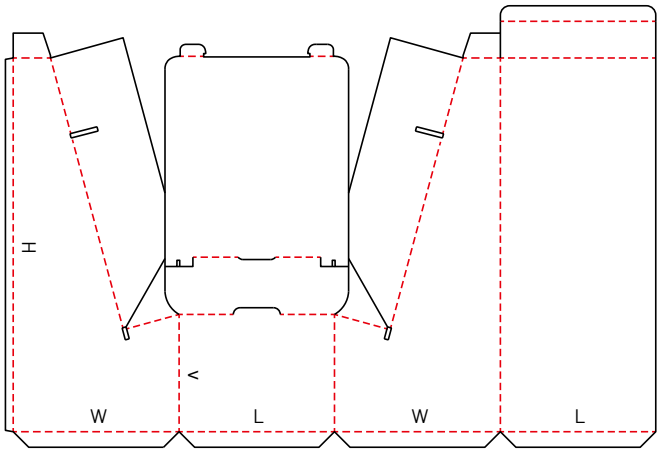

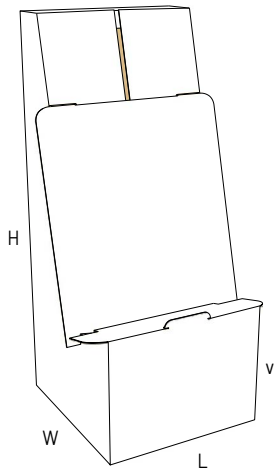

0872 M

NEW

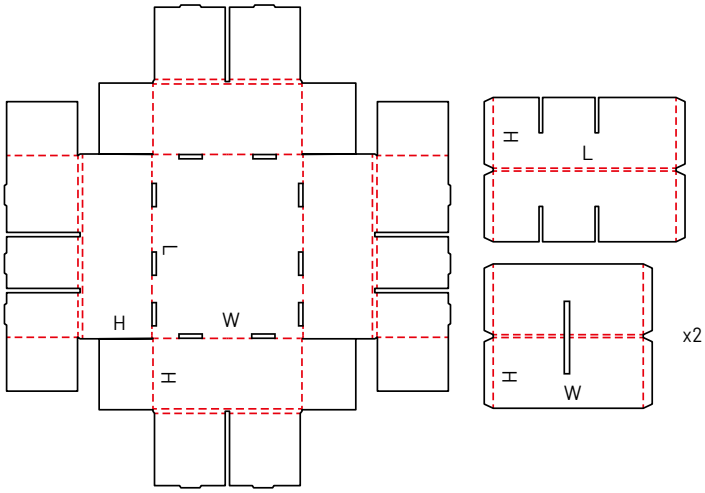

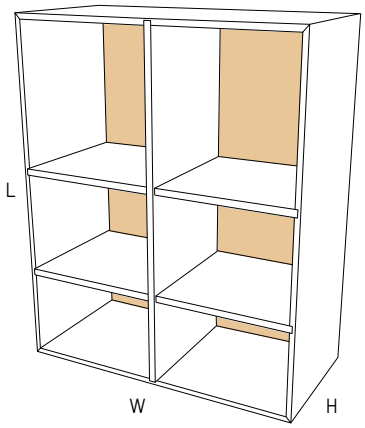

0873 M

NEW

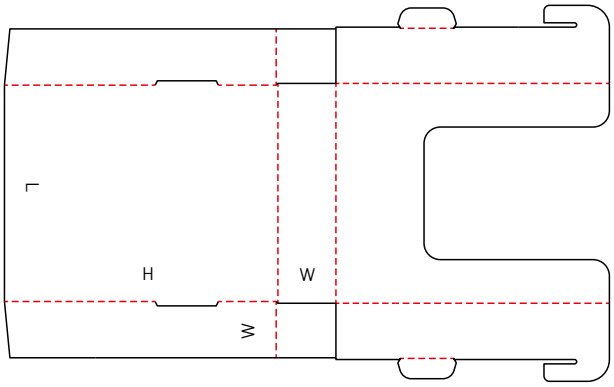

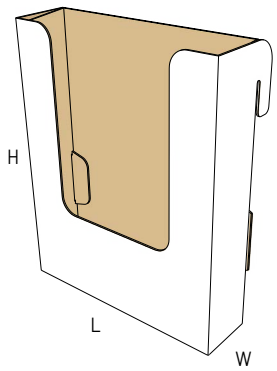

© 2022, 12th Edition - All rights reserved.

0874 M

NEW

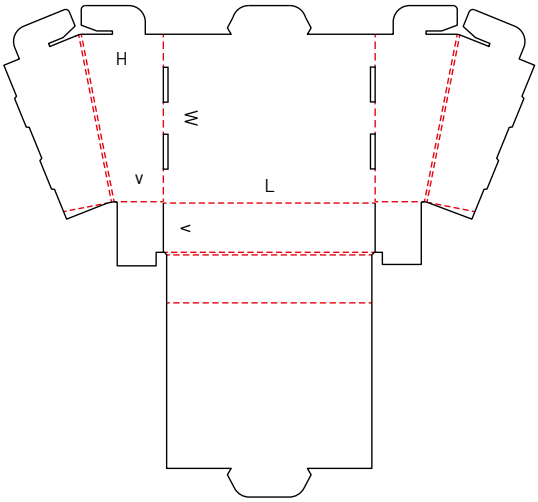

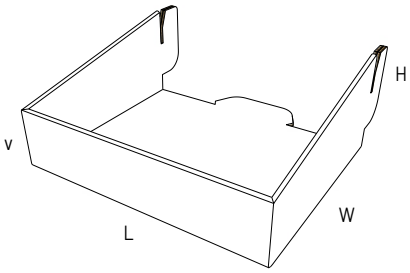

0880 M

NEW

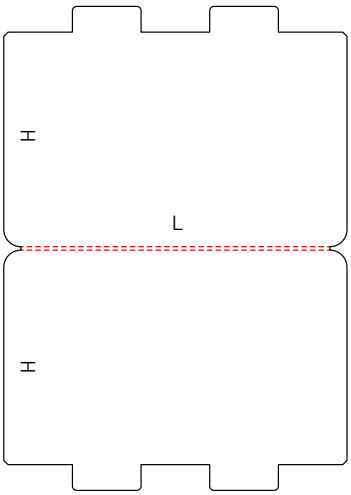

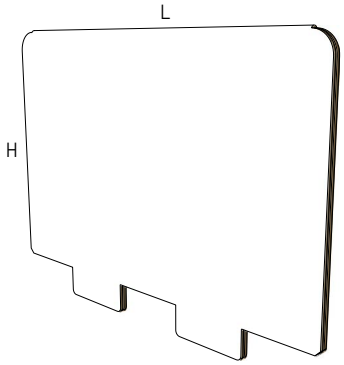

0881 M

NEW

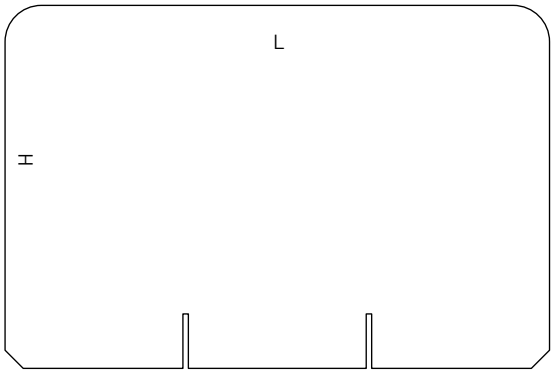

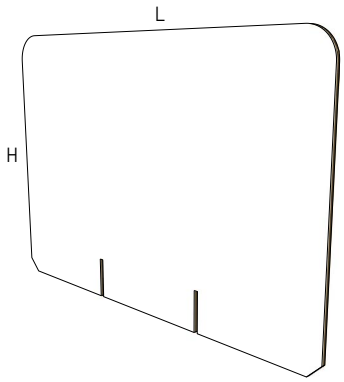

© 2022, 12th Edition - All rights reserved.

0882 M

NEW

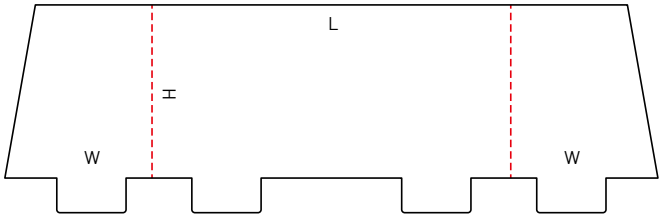

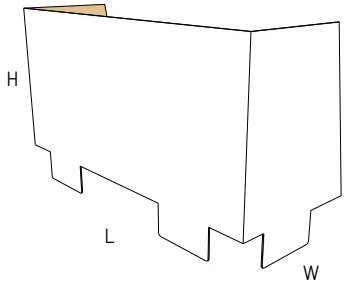

0885 M

NEW

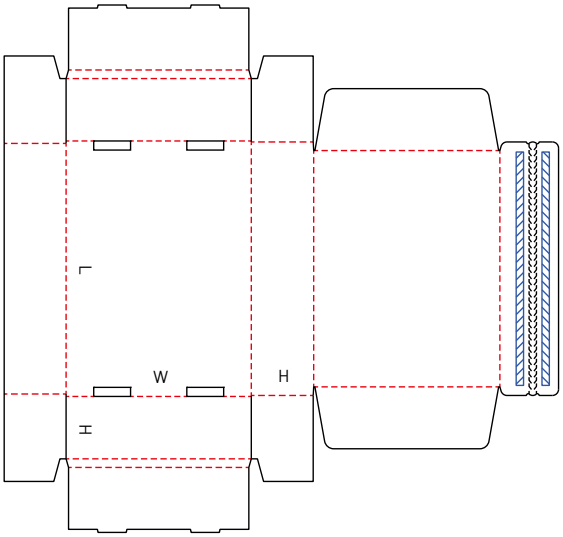

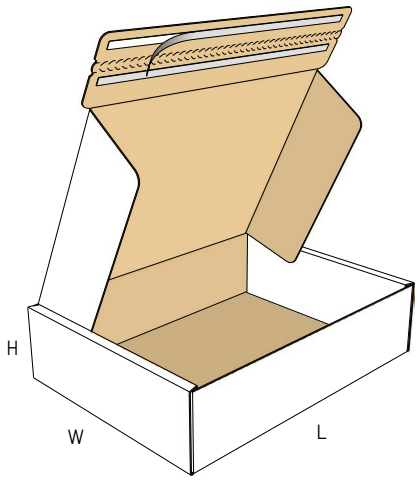

0886 M

NEW

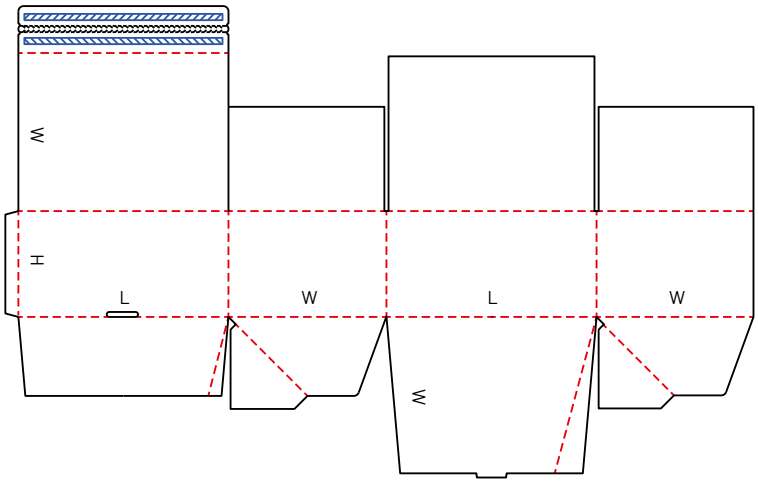

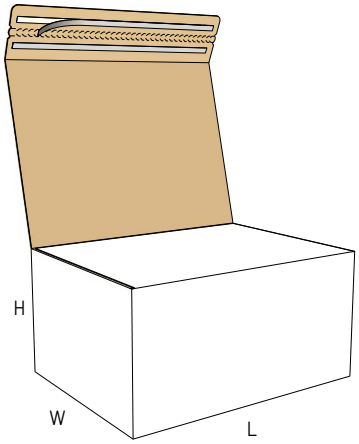

© 2022, 12th Edition - All rights reserved.

0887 M

NEW

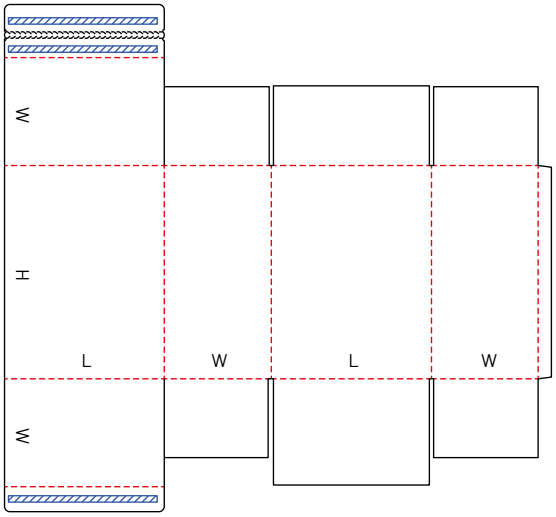

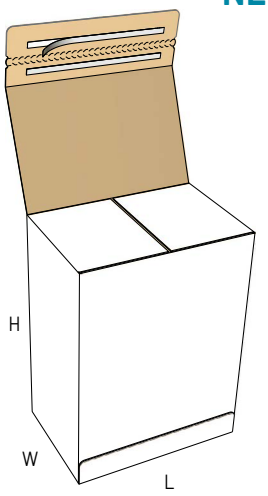

© 2022, 12th Edition - All rights reserved.

INTERIOR FITMENTS

Interior fitments such as inside liners, pads, partitions, dividers, etc. whether integrated in the box design or as separate items. Any shown number of panels is arbitrary and may be increased or decreased as required.

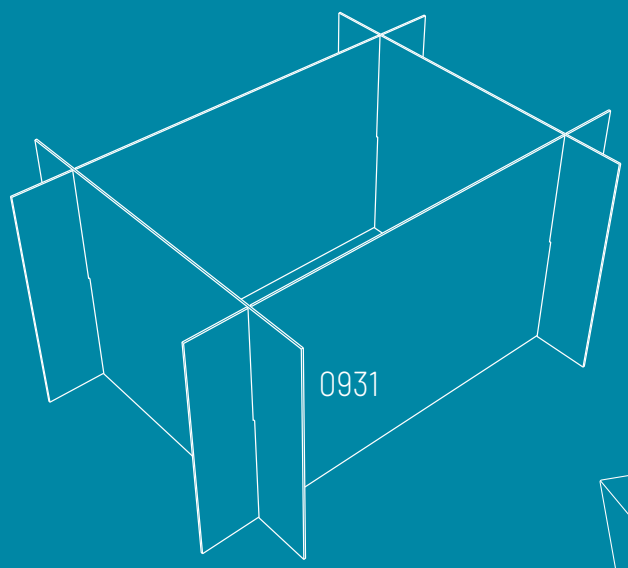

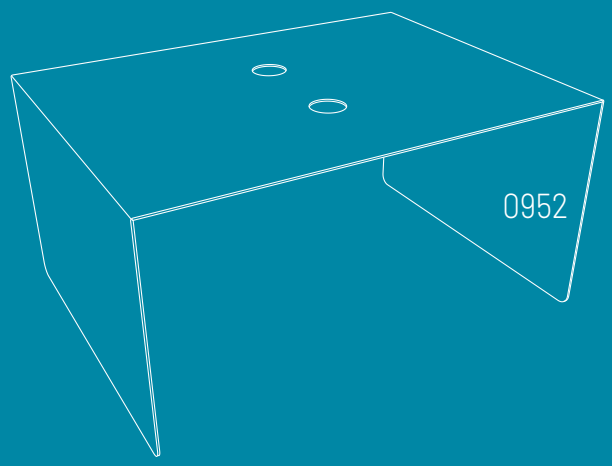

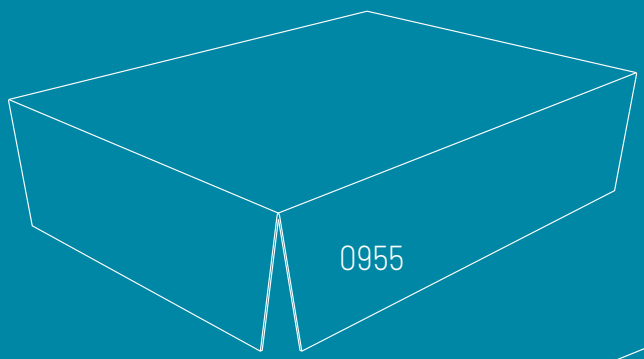

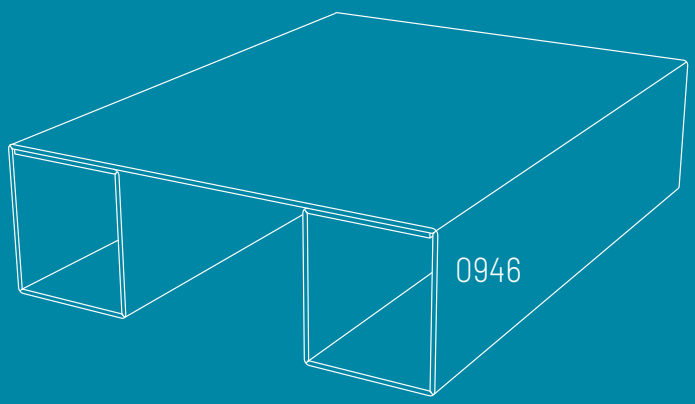

0900 M/A

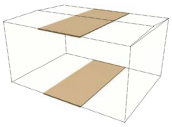

0901 M/A

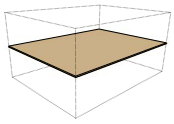

0902 M/A

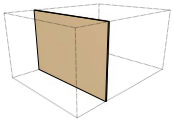

0903 M/A

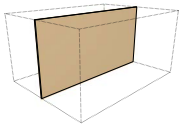

0904 M/A

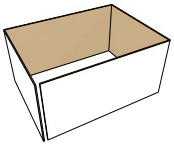

0905 M/A

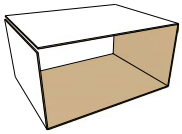

0906 M/A

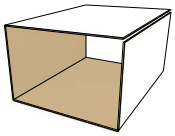

0907 M/A

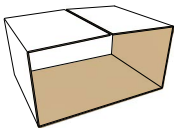

0908 M/A

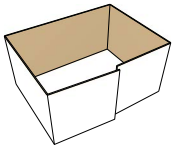

0909 M/A

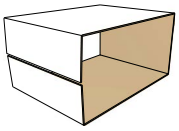

0910 M/A

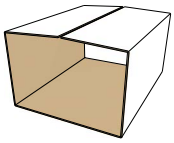

0911 M/A

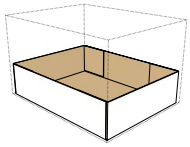

0912 M/A
NEW

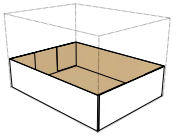

0913 M

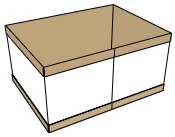

0914 M

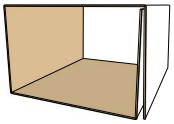

0920 M

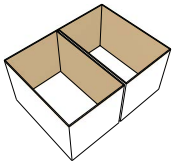

0921 M

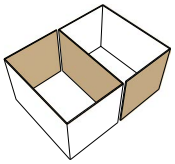

0929 M

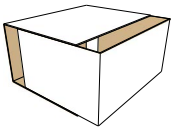

0930 M

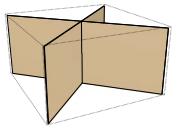

0931 M

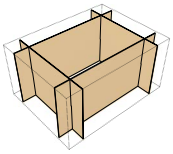

0932 M

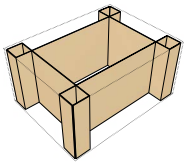

0933 M

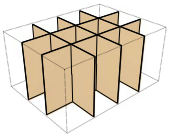

0934 M

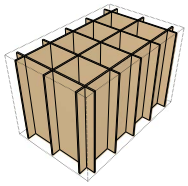

0935 M

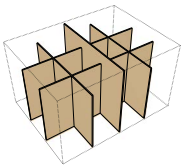

0936 M
NEW

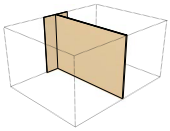

0937 M
NEW

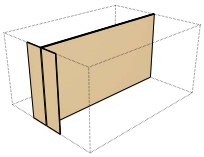

0938 M
NEW

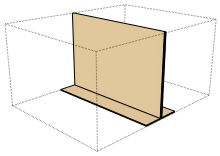

0939 M
NEW

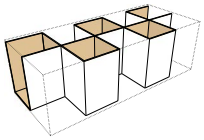

0940 M

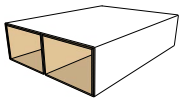

0941 M

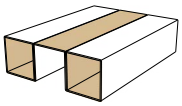

© 2022, 12th Edition - All rights reserved.

0942 M

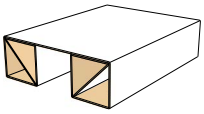

0943 M

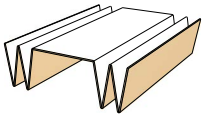

0944 M

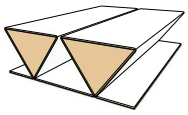

0945 M

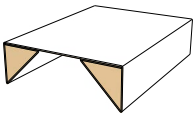

0946 M

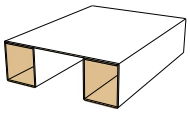

0947 M

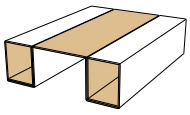

0948 M

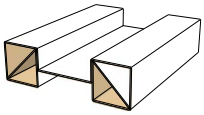

0949 M

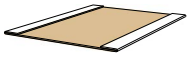

0950 M

0951 M

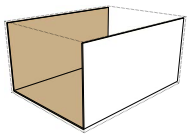

0952 M/A
NEW

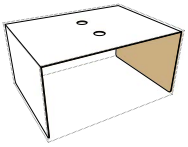

0953 M/A
NEW

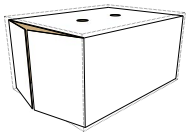

0954 M
NEW

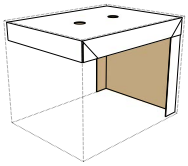

0955 M
NEW

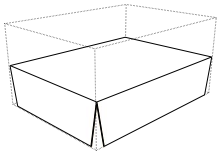

0960 M
NEW

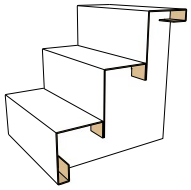

0965 M

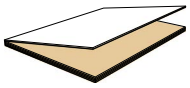

0966 M

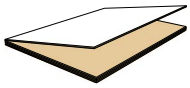

0967 M

0970 M

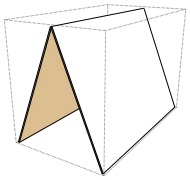

0971 M

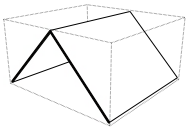

0972 M

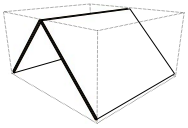

0973 M

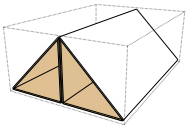

0974 M

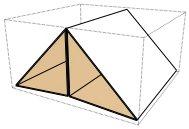

0975 M

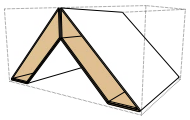

0976 M

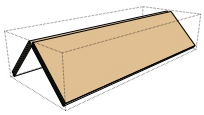

© 2022, 12th Edition - All rights reserved.

0900 M/A

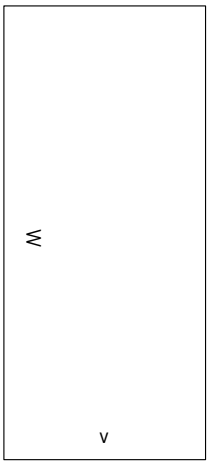

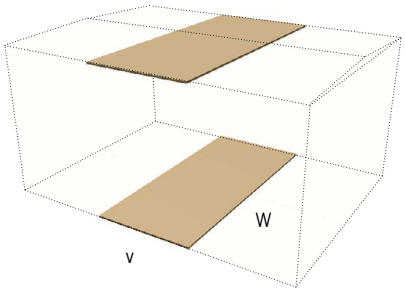

0901 M/A

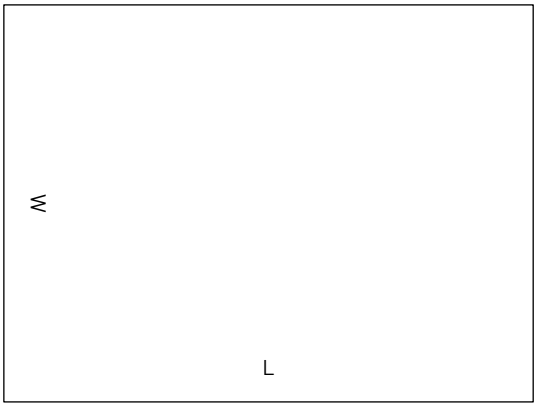

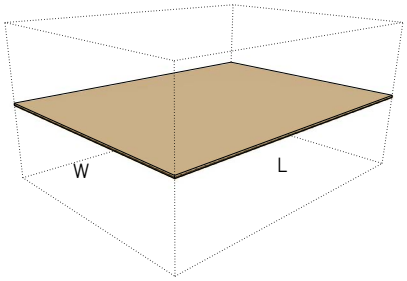

0902 M/A

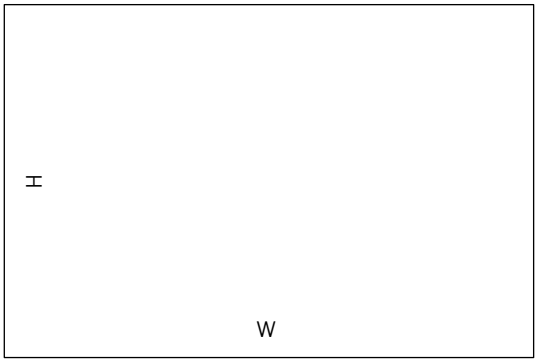

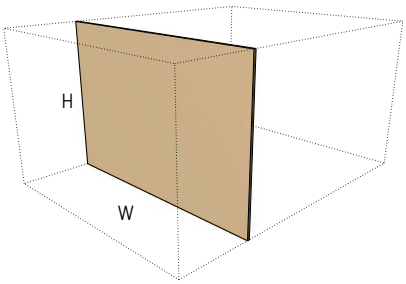

© 2022, 12th Edition - All rights reserved.

0903 M/A

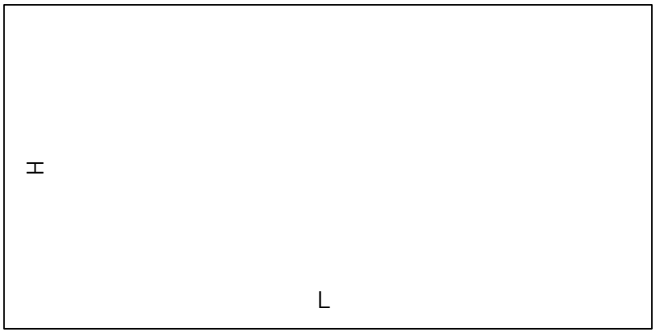

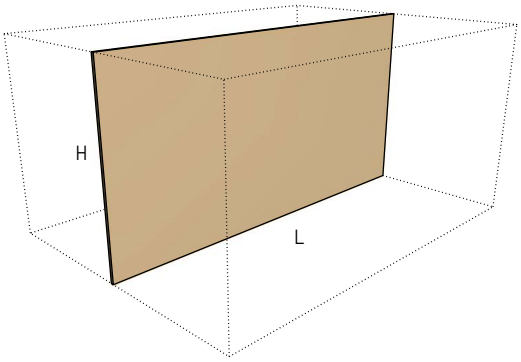

0904 M/A

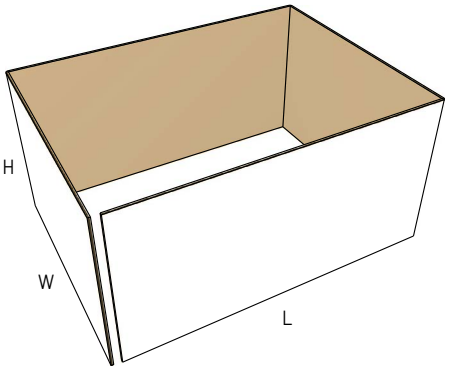

0905 M/A

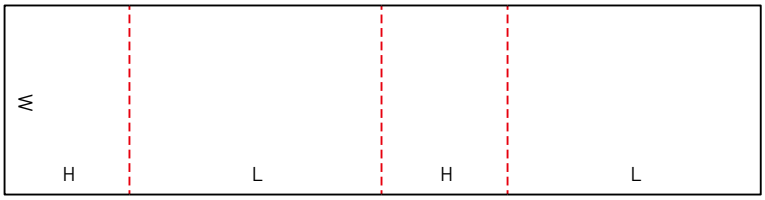

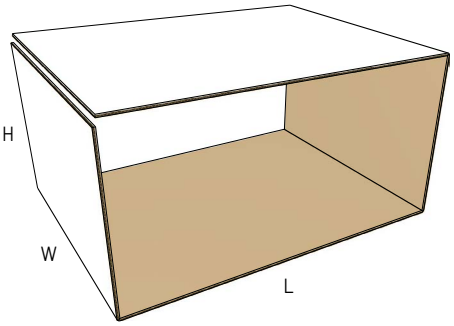

© 2022, 12th Edition - All rights reserved.

0906 M/A

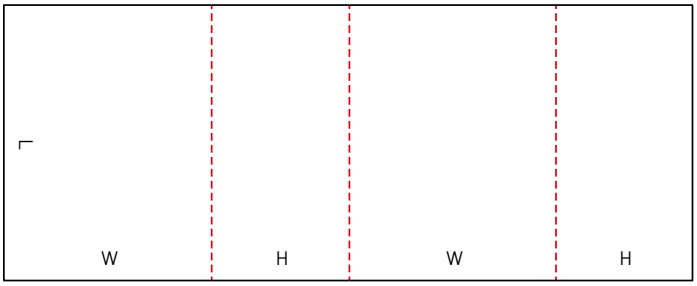

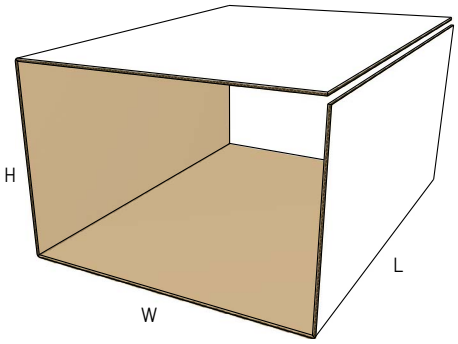

0907 M/A

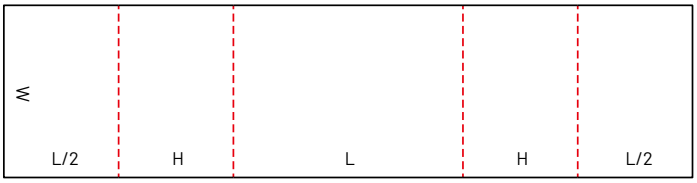

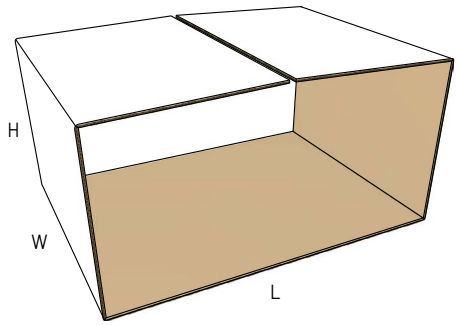

0908 M/A

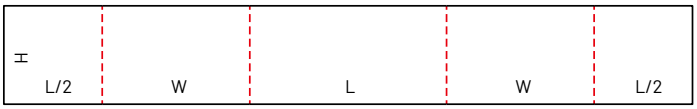

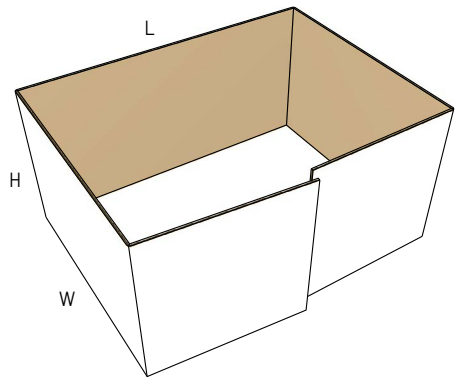

© 2022, 12th Edition - All rights reserved.

0909 M/A

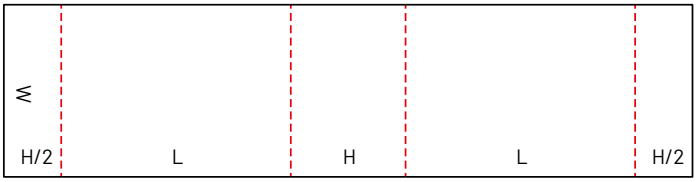

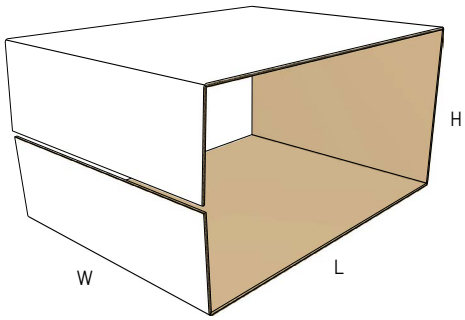

0910 M/A

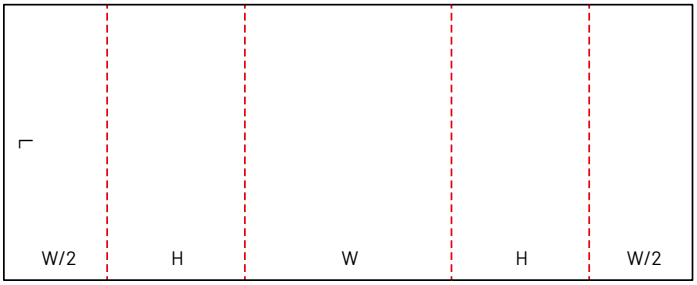

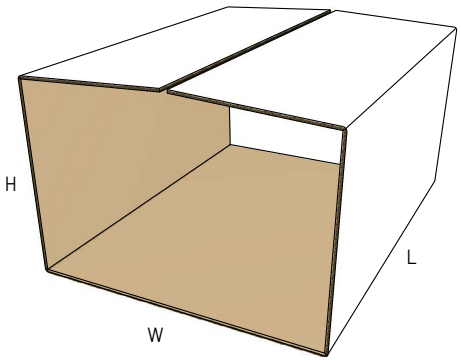

0911 M/A

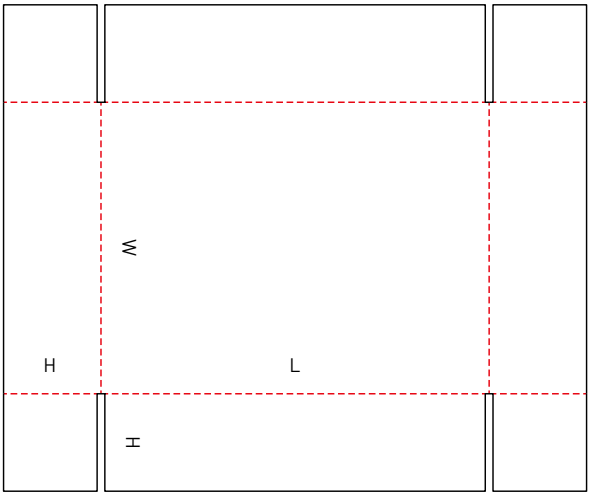

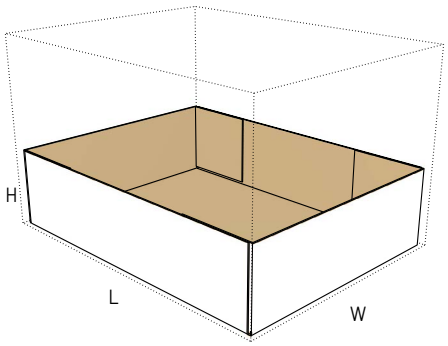

© 2022, 12th Edition - All rights reserved.

0912 M/A

NEW

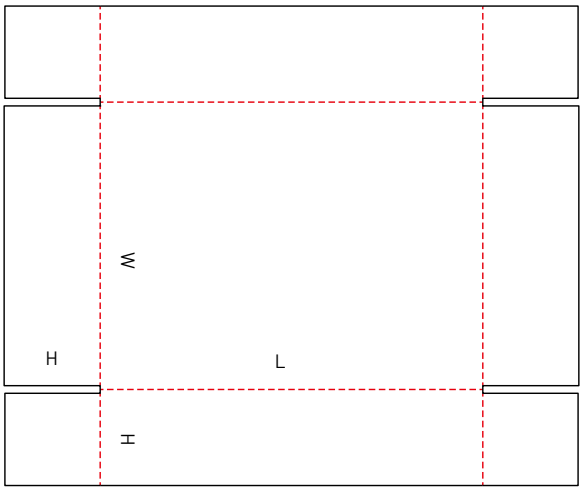

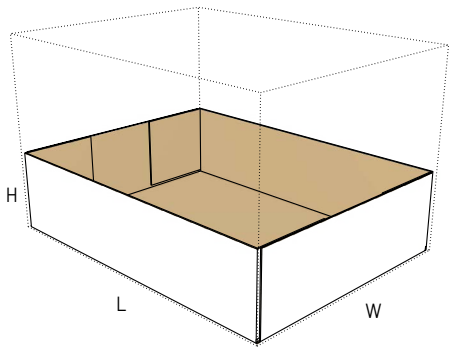

0913 M

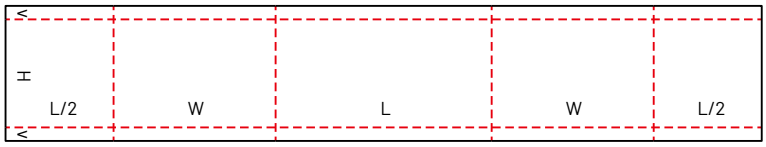

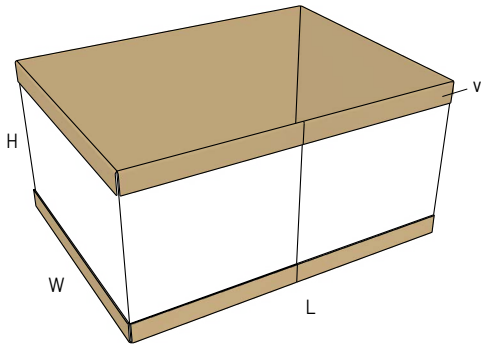

0914 M

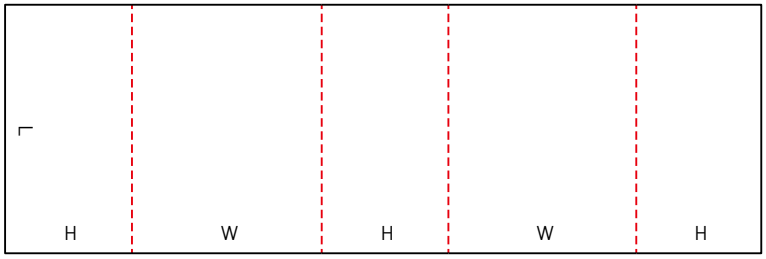

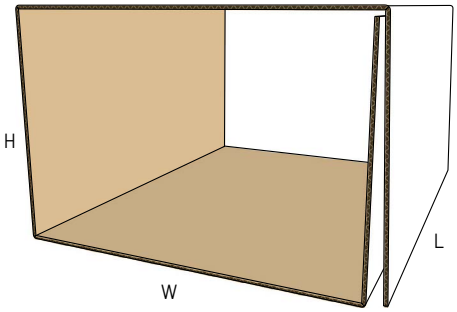

© 2022, 12th Edition - All rights reserved.

0920 M

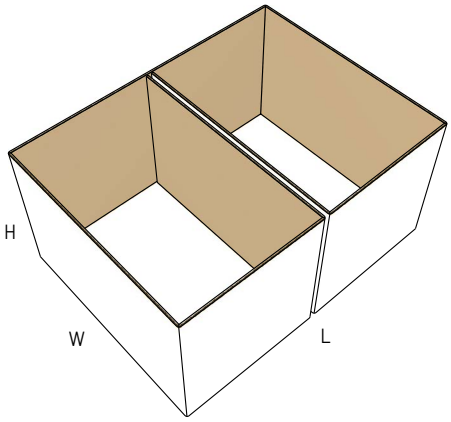

0921 M

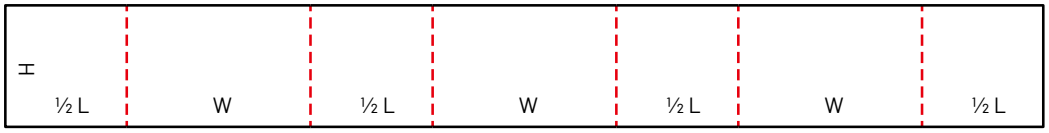

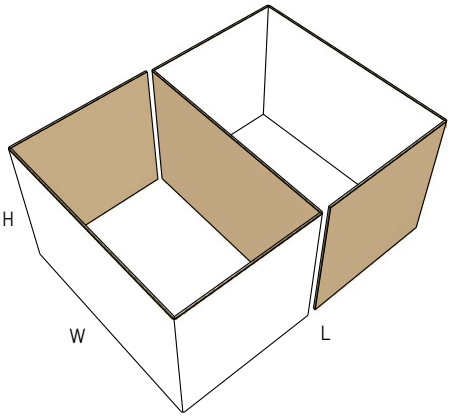

0929 M

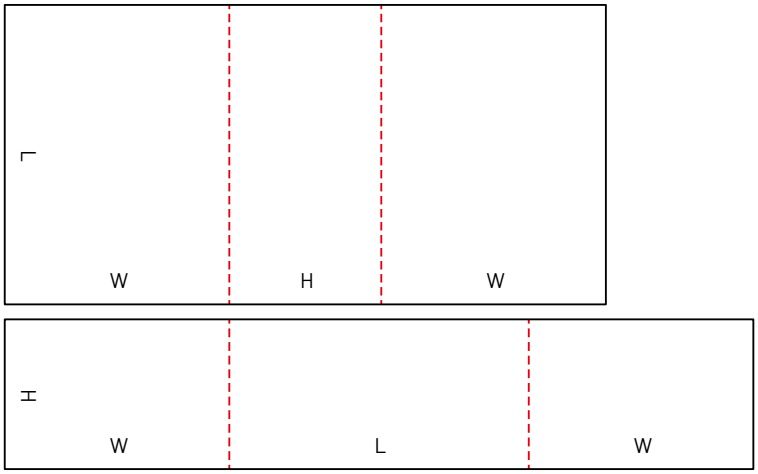

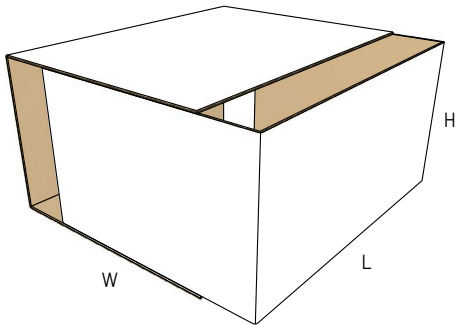

© 2022, 12th Edition - All rights reserved.

0930 M

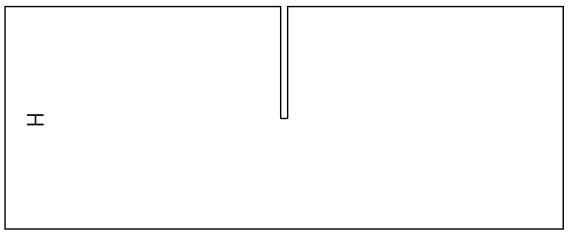

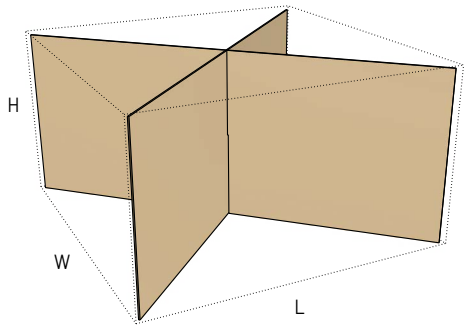

0931 M

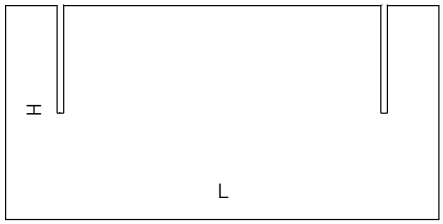

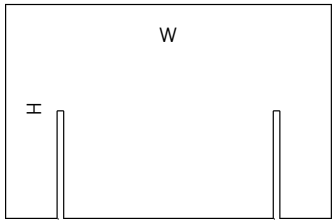

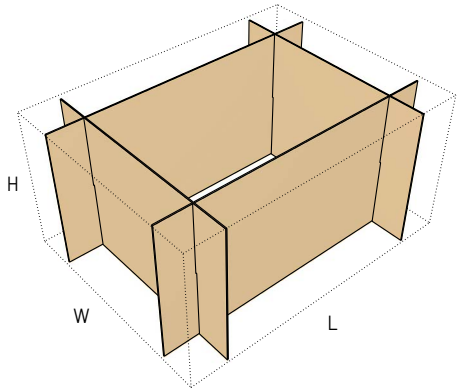

0932 M

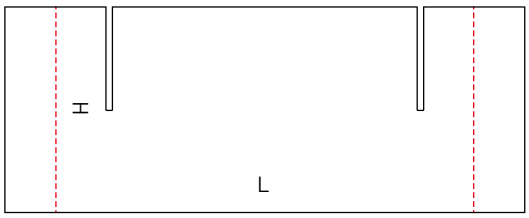

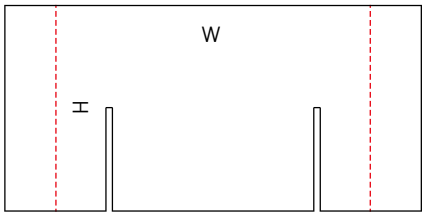

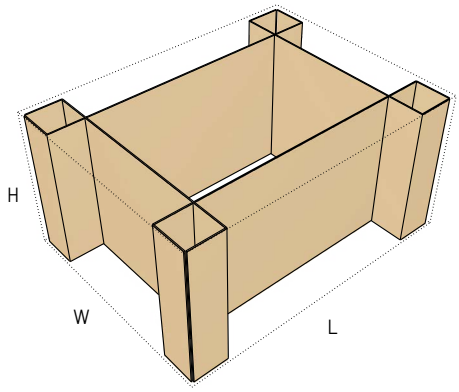

© 2022, 12th Edition - All rights reserved.

0933 M

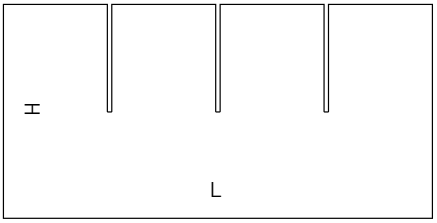

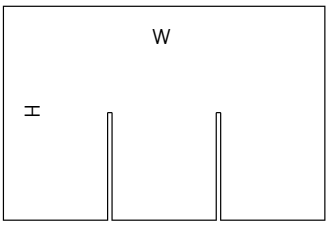

Number of cells
defined by user.

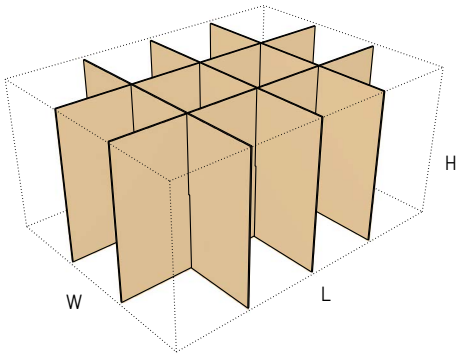

0934 M

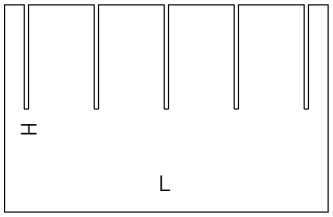

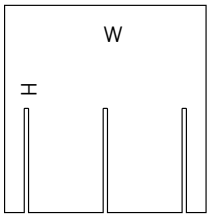

Number of cells
defined by user.

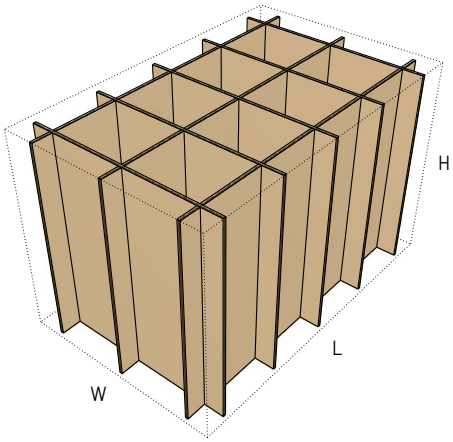

0935 M

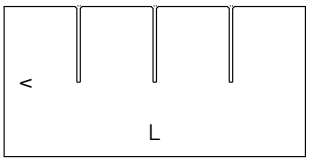

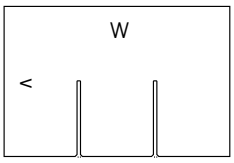

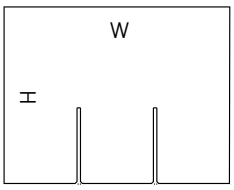

Number of cells
defined by user.

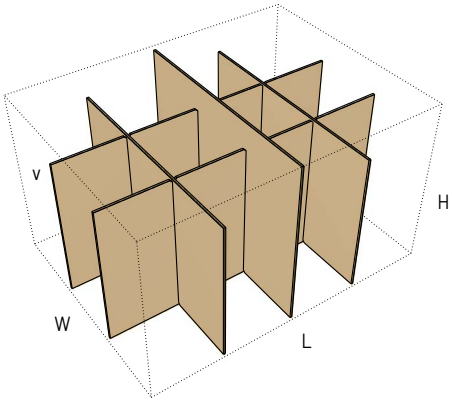

© 2022, 12th Edition - All rights reserved.

0936 M

NEW

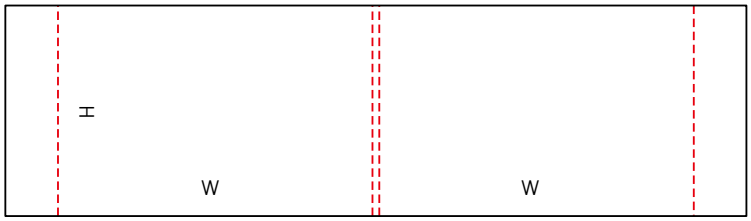

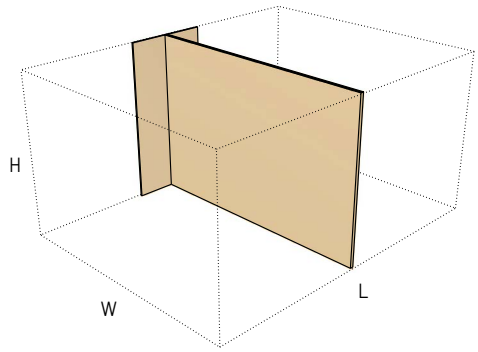

0937 M

NEW

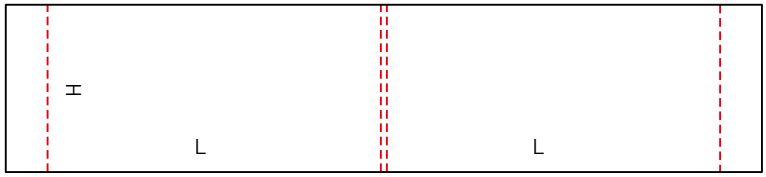

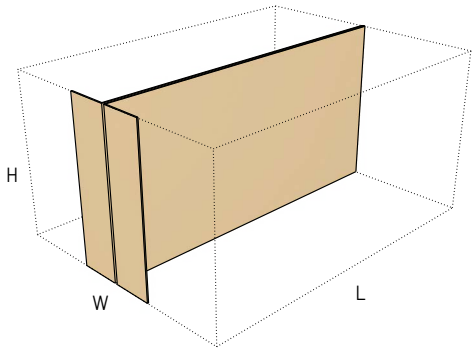

0938 M

NEW

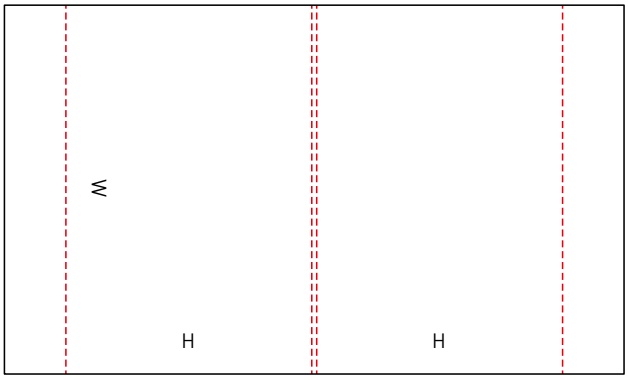

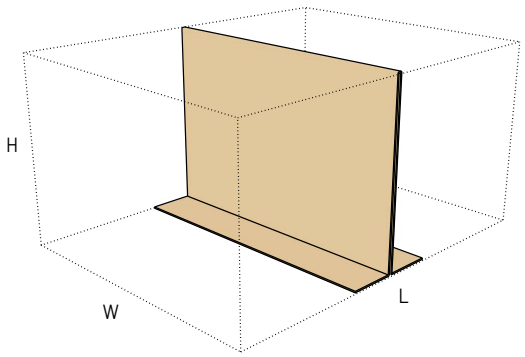

© 2022, 12th Edition - All rights reserved.

0939 M

NEW

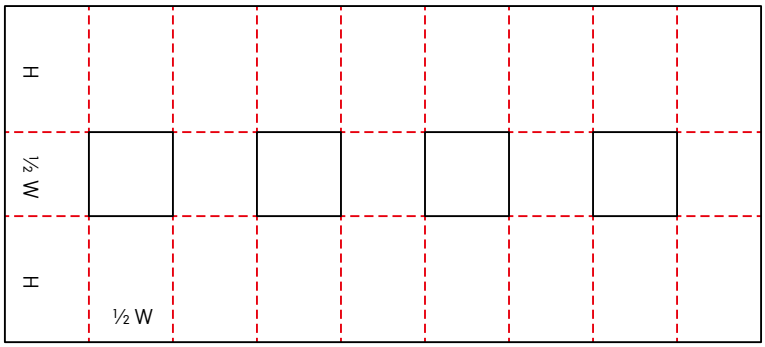

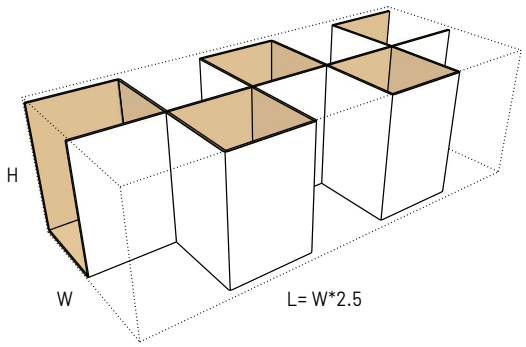

0940 M

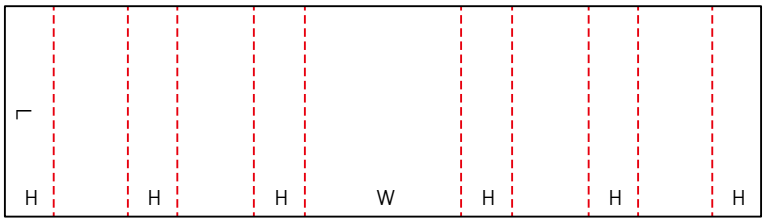

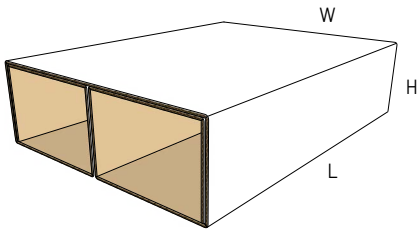

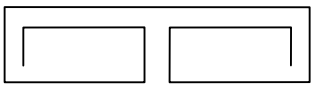

0941 M

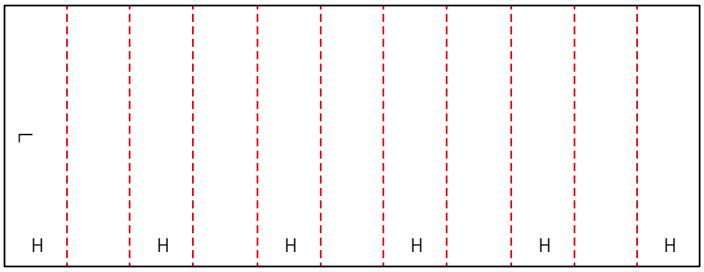

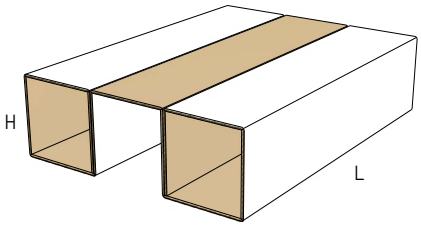

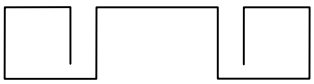

© 2022, 12th Edition - All rights reserved.

0942 M

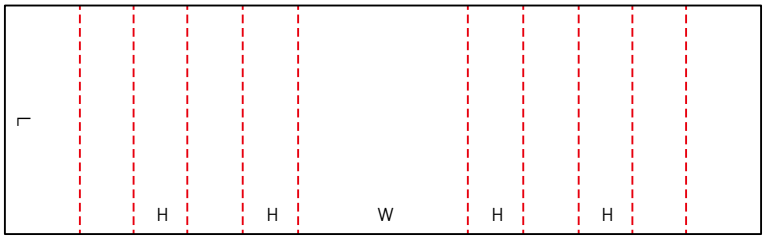

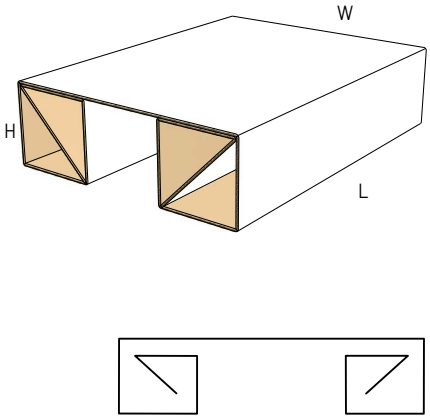

0943 M

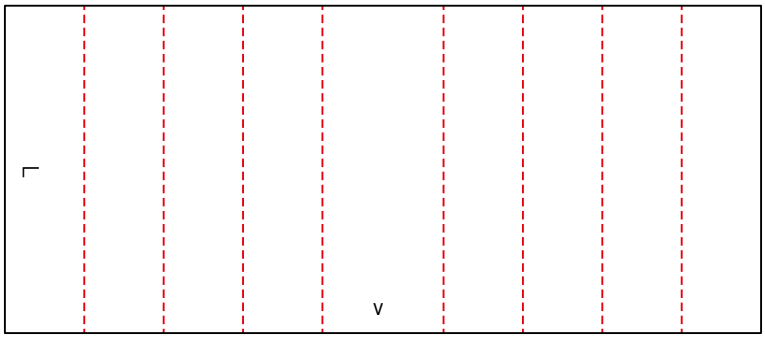

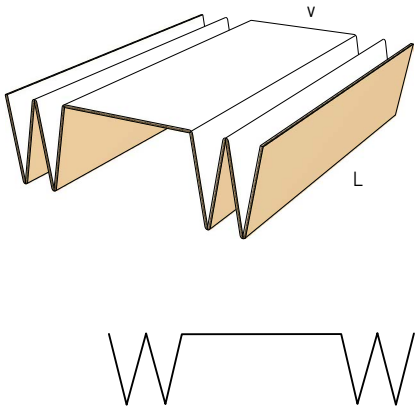

0944 M

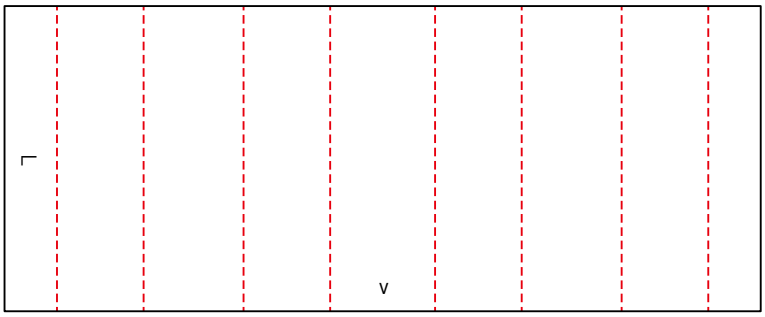

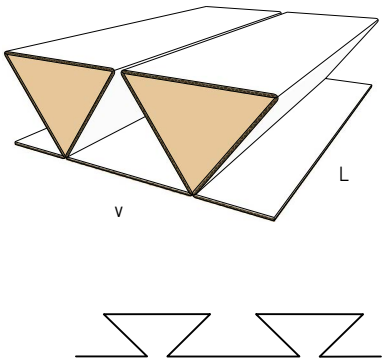

© 2022, 12th Edition - All rights reserved.

0945 M

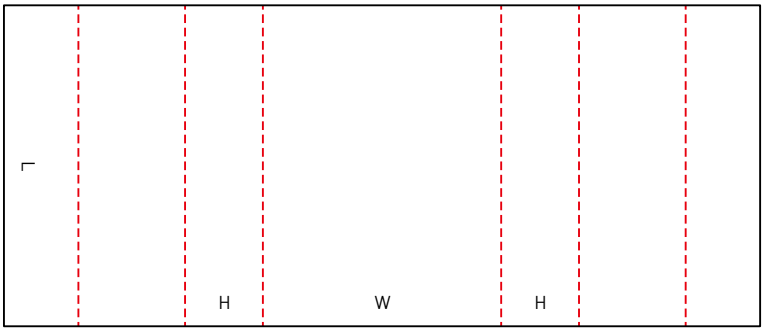

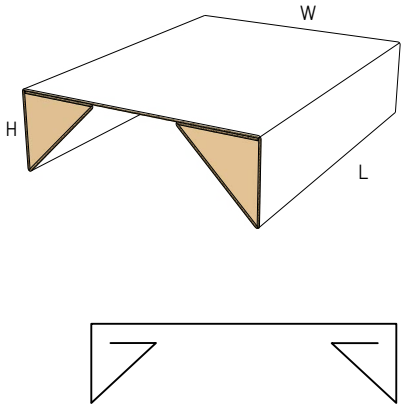

0946 M

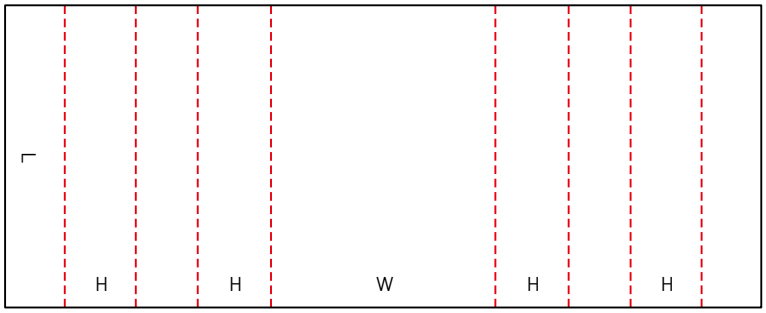

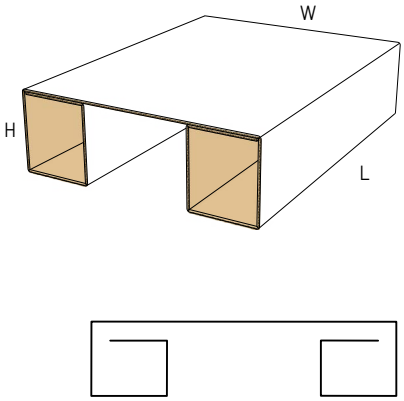

0947 M

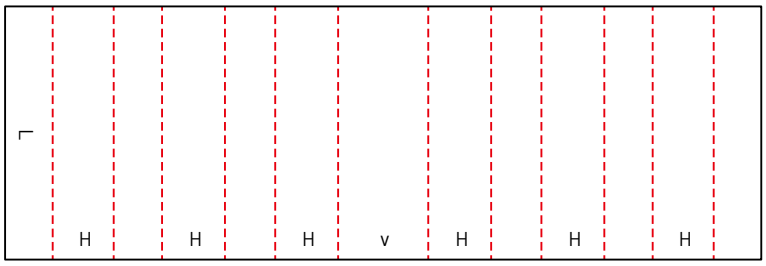

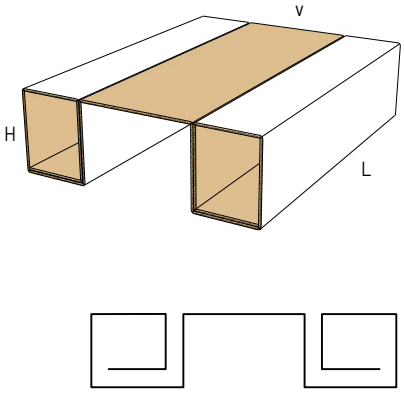

© 2022, 12th Edition - All rights reserved.

0948 M

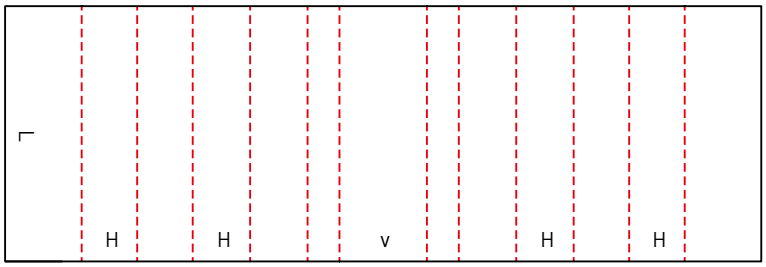

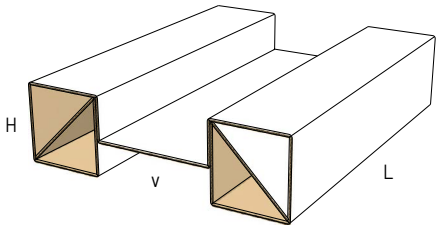

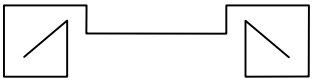

0949 M

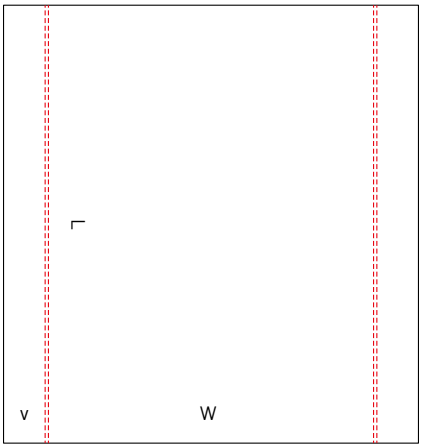

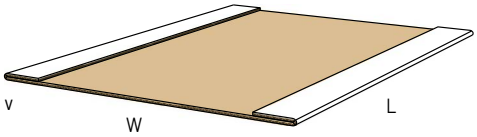

0950 M

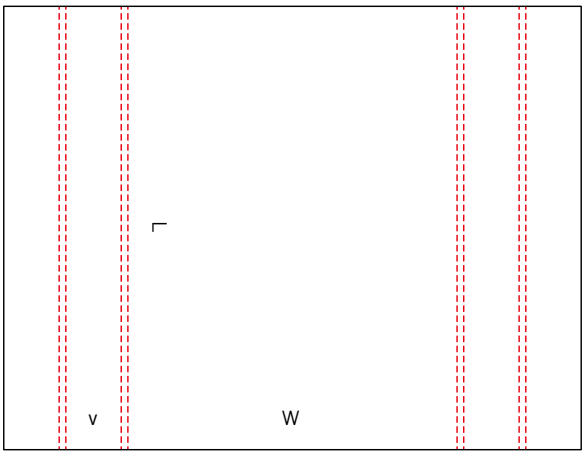

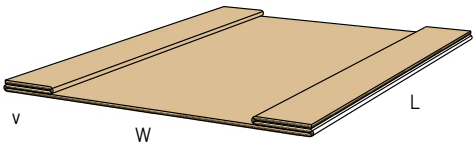

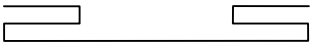

© 2022, 12th Edition - All rights reserved.

0951 M

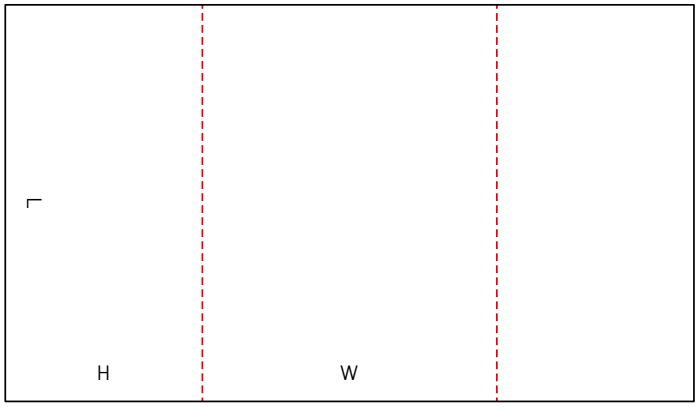

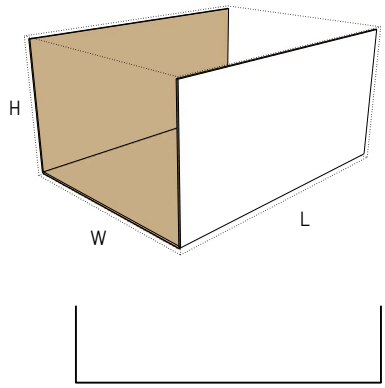

0952 M/A

NEW

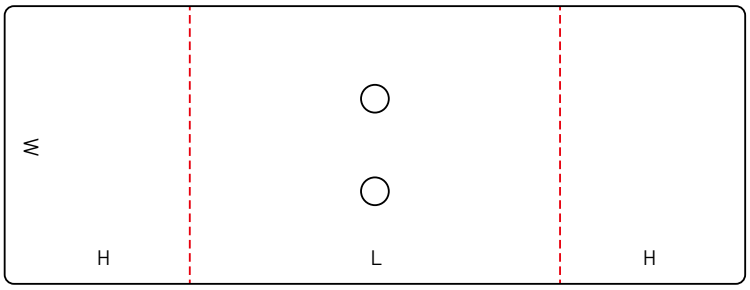

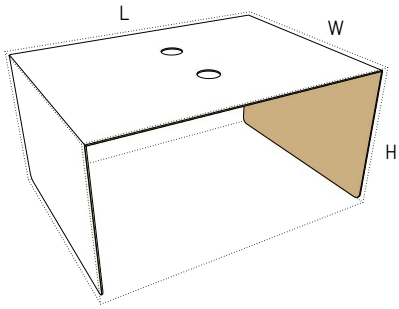

0953 M/A

NEW

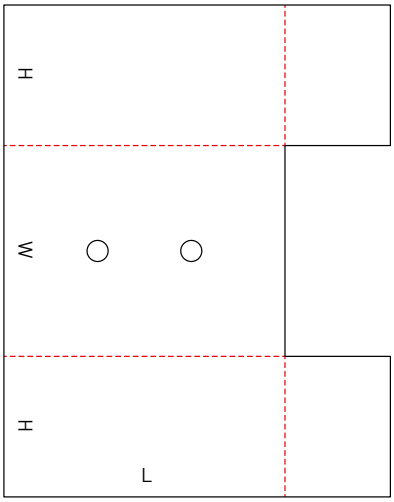

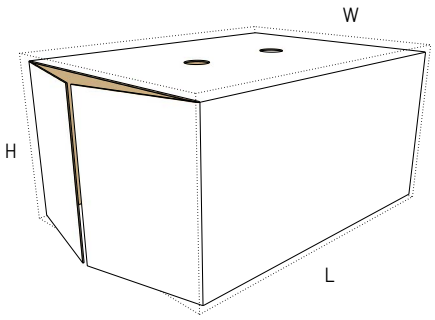

© 2022, 12th Edition - All rights reserved.

0954 M

NEW

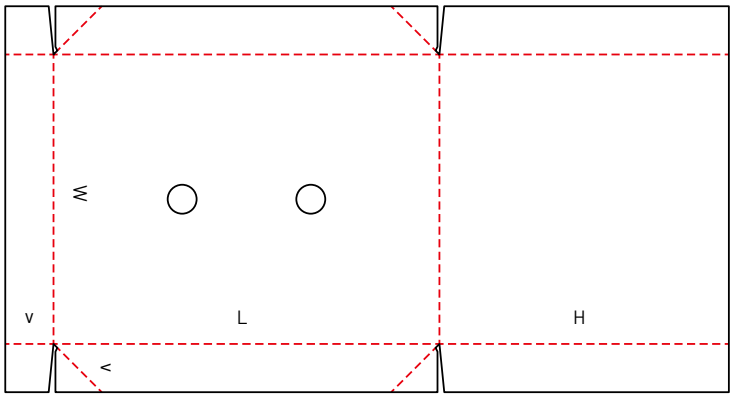

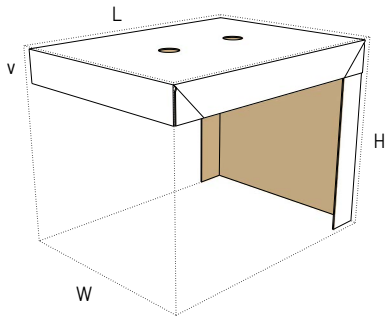

0955 M

NEW

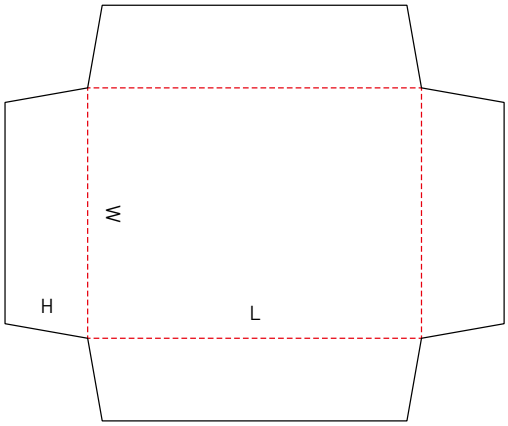

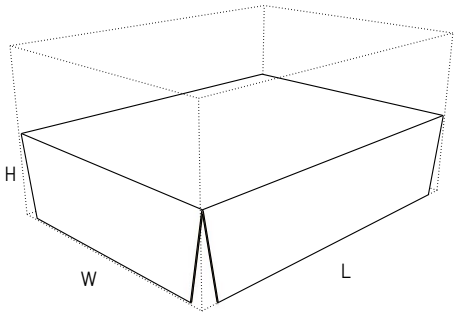

0960 M

NEW

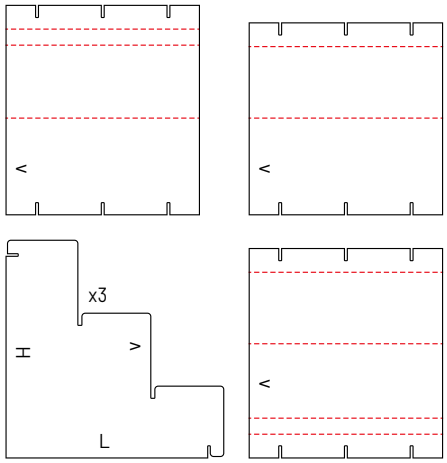

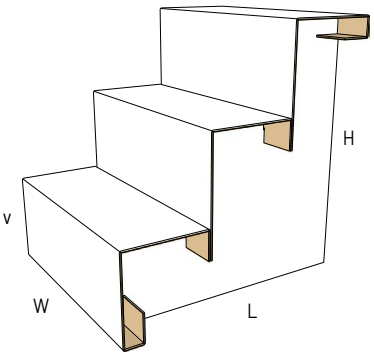

© 2022, 12th Edition - All rights reserved.

0965 M

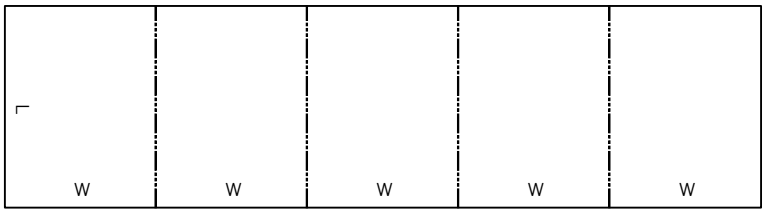

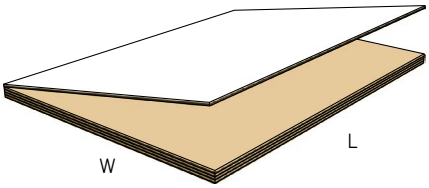

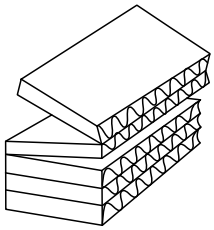

0966 M

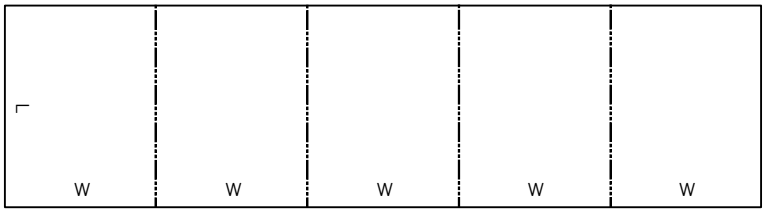

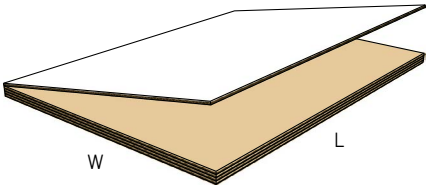

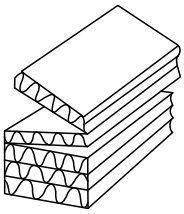

0967 M

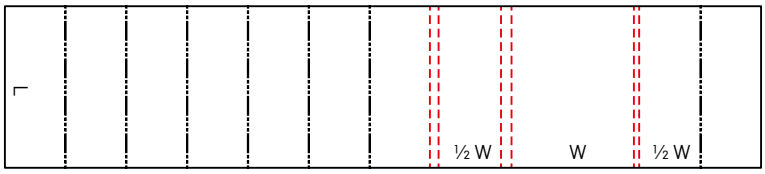

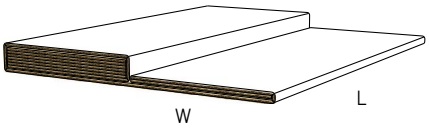

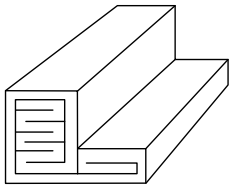

© 2022, 12th Edition - All rights reserved.

0970 M

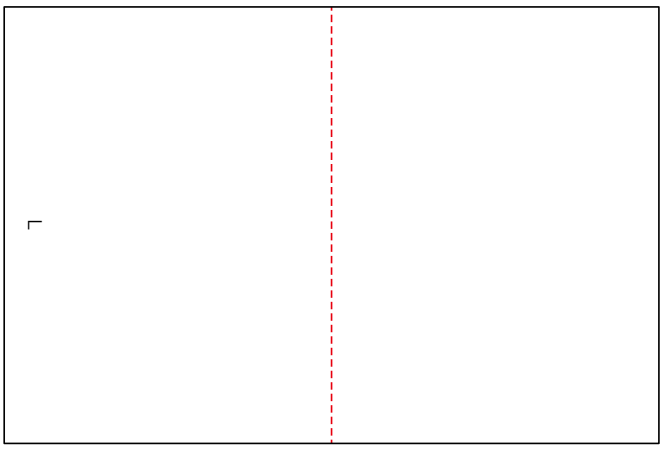

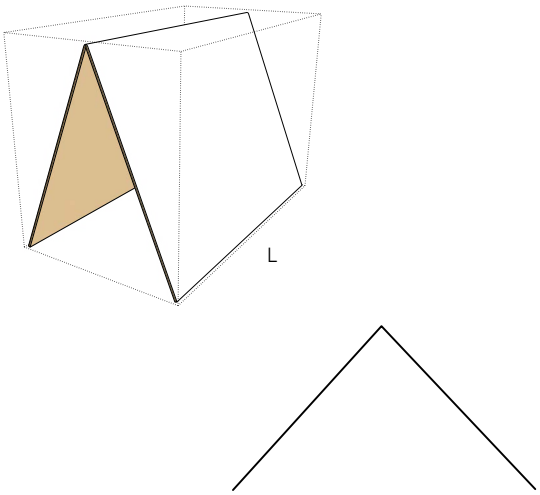

0971 M

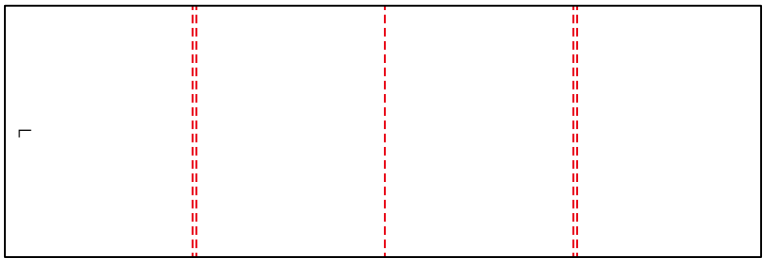

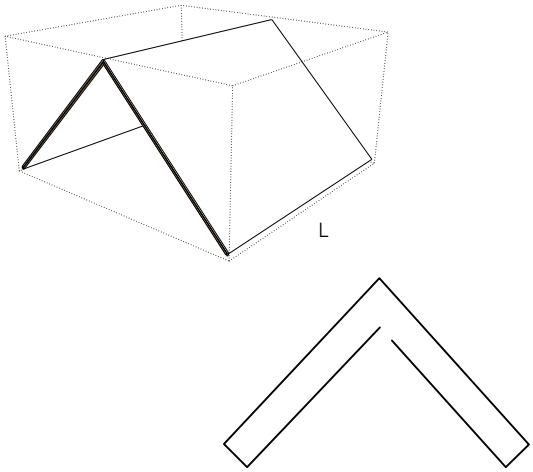

0972 M

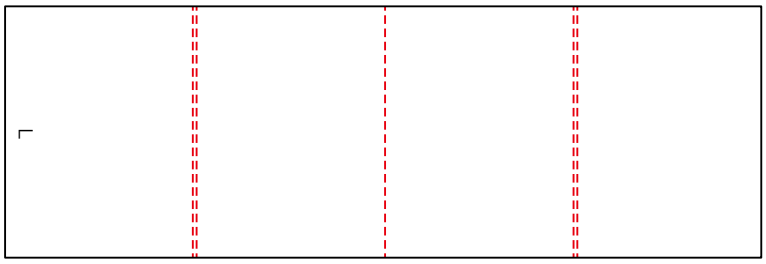

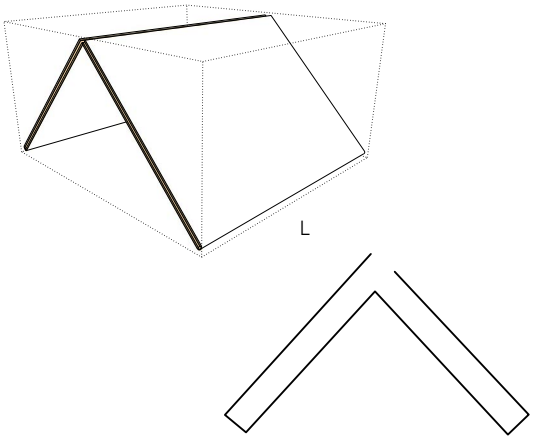

© 2022, 12th Edition - All rights reserved.

0973 M

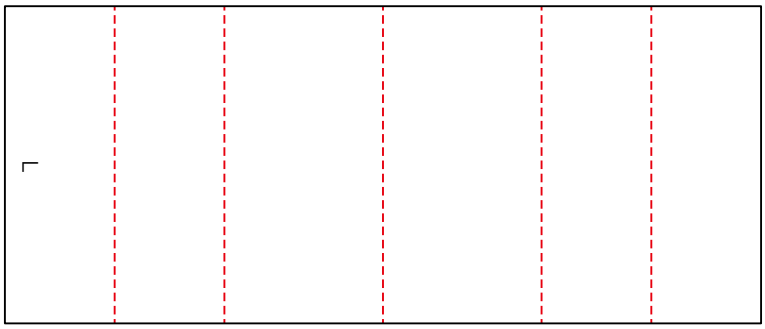

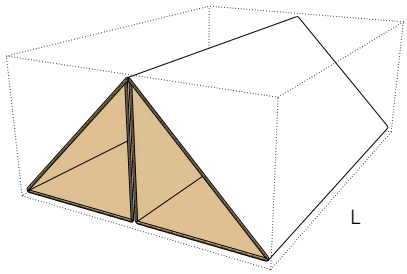

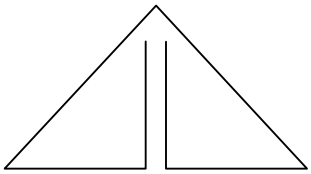

0974 M

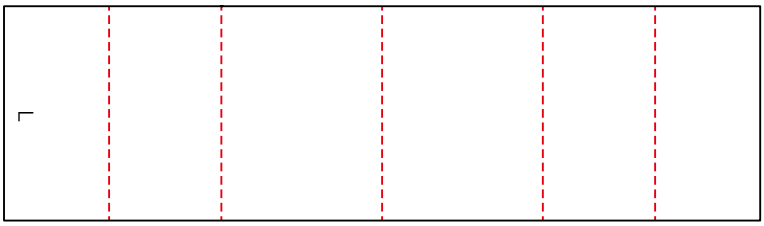

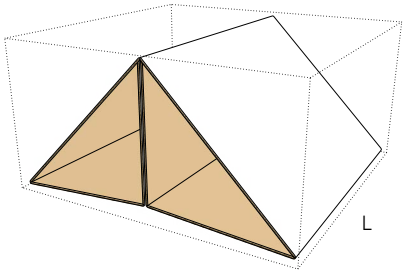

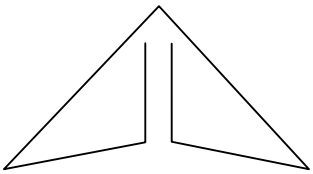

0975 M

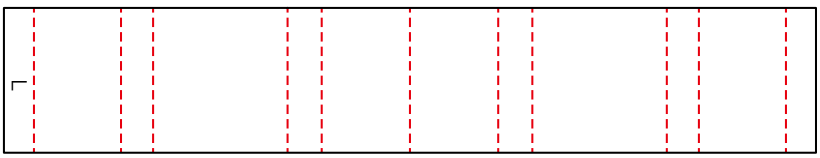

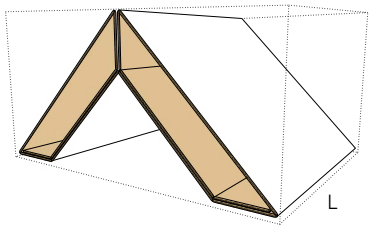

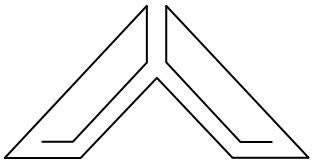

© 2022, 12th Edition - All rights reserved.

0976 M

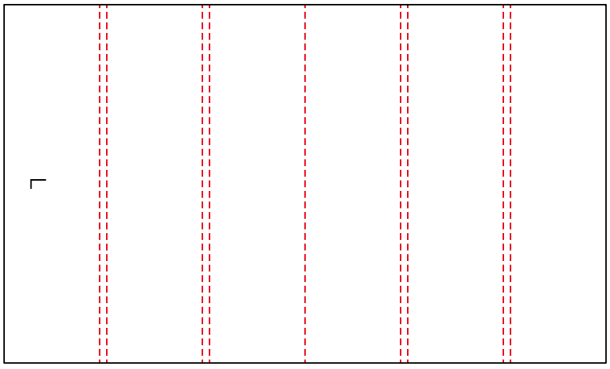

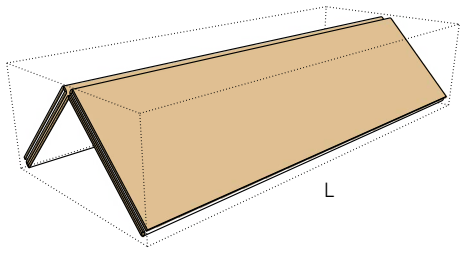

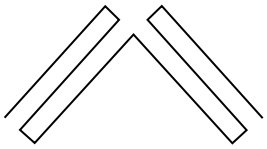

© 2022, 12th Edition - All rights reserved.

www.fefco.org

250 Avenue Louise, 1050 Brussels
+32 2 646 4070 – info@fefco.org

MEMBER OF